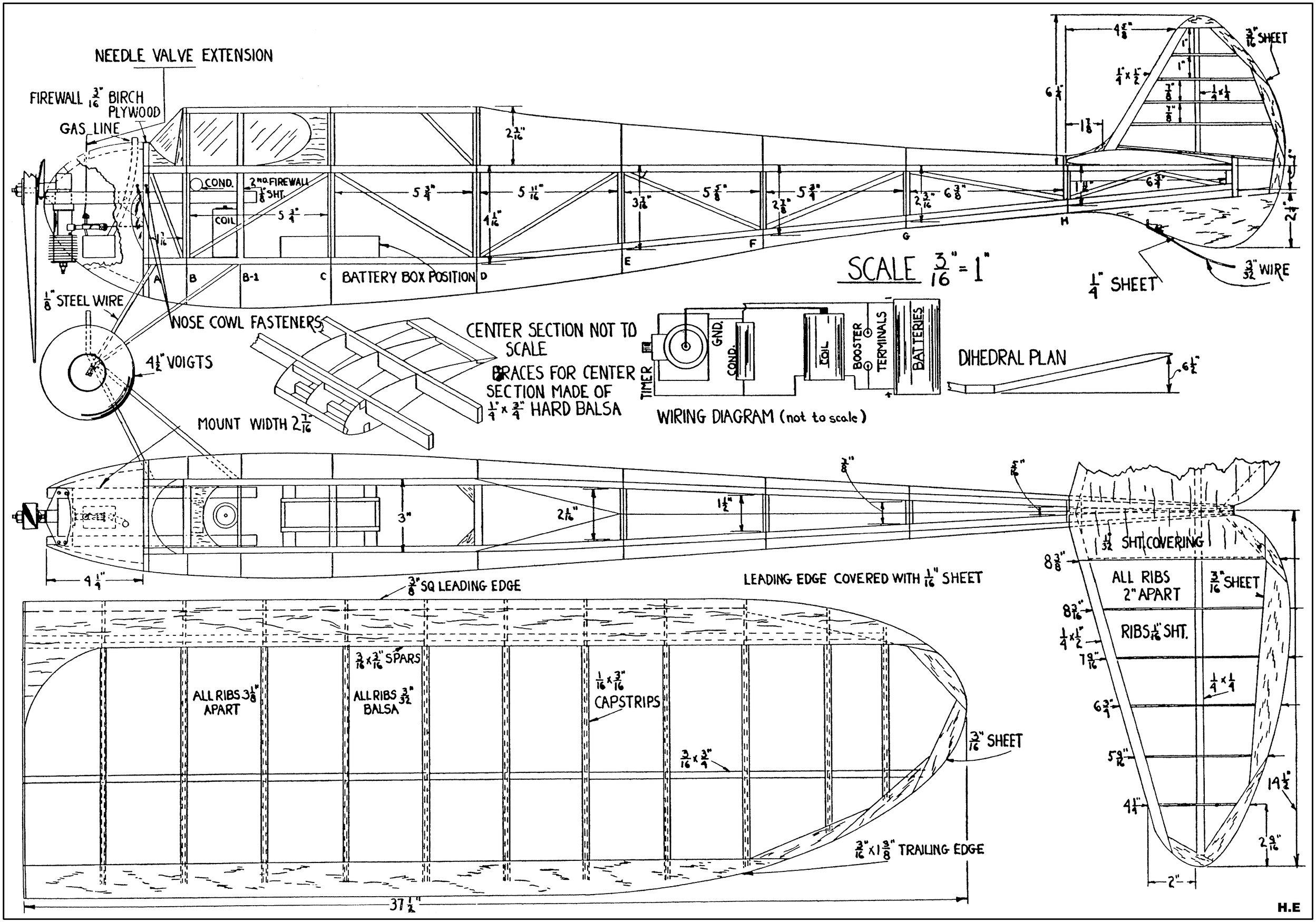
NEEDLE VALVE EXTENSION
FIREWALL 3/16" BIRCH PLYWOOD
GAS LINE
COND.
2ND FIREWALL 1/8" SHT.
COIL
BATTERY BOX POSITION
A
B
B-1
C
D
E
F
G
H
SCALE 3/16" = 1"
3/16" SHEET
3/32" WIRE
1/4" SHEET
1/8" STEEL WIRE
NOSE COWL FASTENERS
4 1/2" VOIGTS
MOUNT WIDTH 2 7/16"
CENTER SECTION NOT TO SCALE
BRACES FOR CENTER SECTION MADE OF 1/4" x 3/4" HARD BALSA
TIMER
GND.
COND.
COIL
BOOSTER
TERMINALS
BATTERIES
WIRING DIAGRAM (not to scale)
DIHEDRAL PLAN
3/8" SQ LEADING EDGE
LEADING EDGE COVERED WITH 1/16" SHEET
3/16 x 3/16" SPARS
ALL RIBS 3 1/8" APART
ALL RIBS 3/32" BALSA
1/16 x 3/16" CAPSTRIPS
3/16 x 3/4"
3/16" SHEET
3/16" x 1 3/8" TRAILING EDGE
37 1/2"
1/32" SHT. COVERING
ALL RIBS 2" APART
3/16" SHEET
RIBS 1/16" SHT.
1/4 x 1/4
14 1/2"
2"
H.E

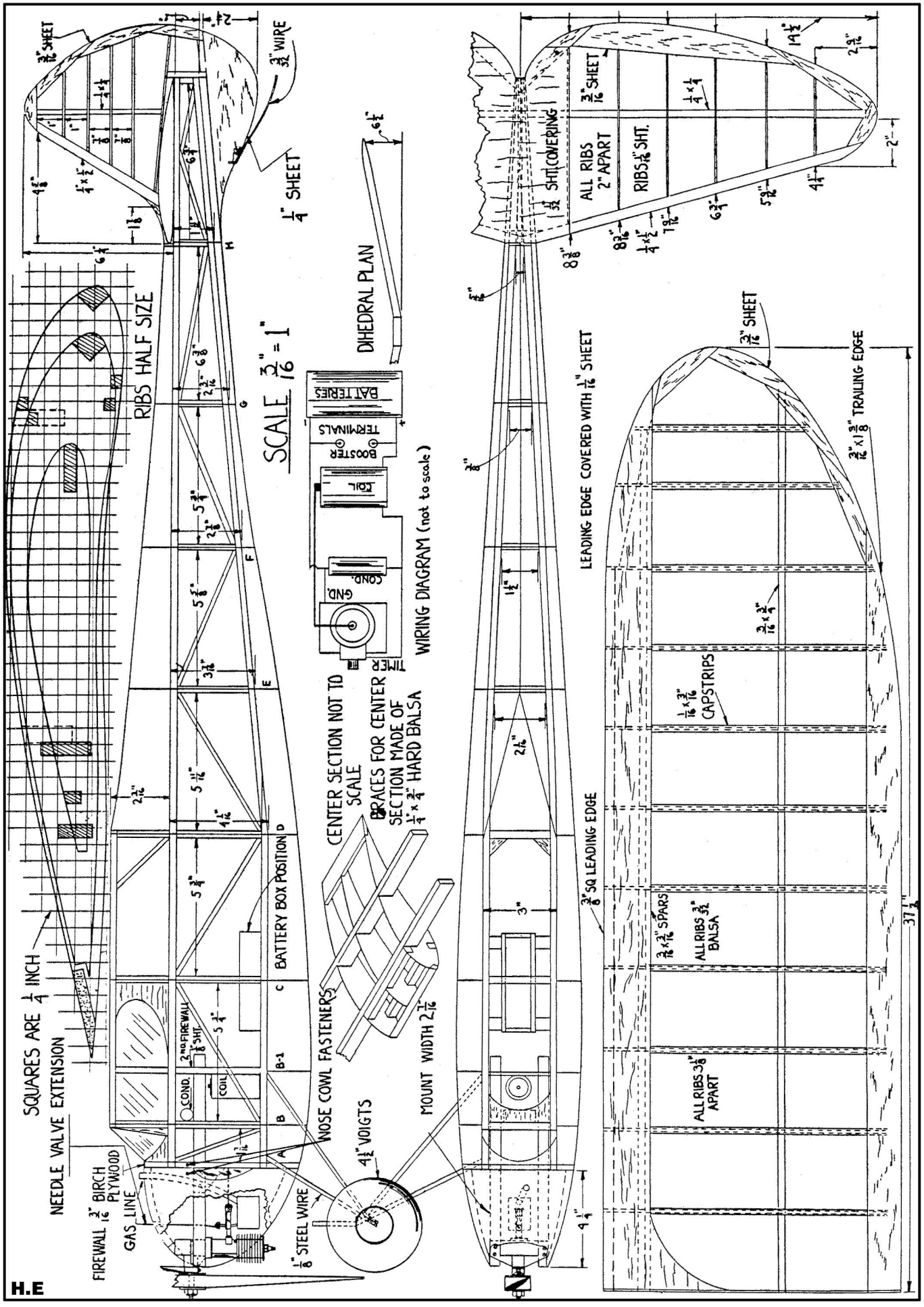
SCALE 3/16" = 1"
RIBS HALF SIZE
DIHEDRAL PLAN
WIRING DIAGRAM (not to scale)
BATTERIES
TERMINALS
BOOSTER
COIL
COND.
GND.
TIMER
CENTER SECTION NOT TO SCALE
BRACES FOR CENTER SECTION MADE OF 1/4" x 3/4" HARD BALSA
NOSE COWL FASTENERS
MOUNT WIDTH 2 7/16"
4 1/2" VOIGTS
1/8" STEEL WIRE
FIREWALL 3/16" BIRCH PLYWOOD
GAS LINE
NEEDLE VALVE EXTENSION
SQUARES ARE 1/4 INCH
BATTERY BOX POSITION
2ND FIREWALL 1/8" SHT.
COND.
COIL
3/32" WIRE
1/4" SHEET
3/16" SHEET
1/32" SHT. COVERING
ALL RIBS 2" APART
RIBS 1/16" SHT.
1/4" x 1/4"
LEADING EDGE COVERED WITH 1/16" SHEET
3/8" SQ LEADING EDGE
3/16" SHEET
3/16" x 1 3/8" TRAILING EDGE
3/16" x 3/4"
1/16" x 3/16" CAPSTRIPS
3/16" x 3/16" SPARS
ALL RIBS 3/32" BALSA
ALL RIBS 3 1/8" APART
37 1/2"
H.E

FLYING ACES reprint

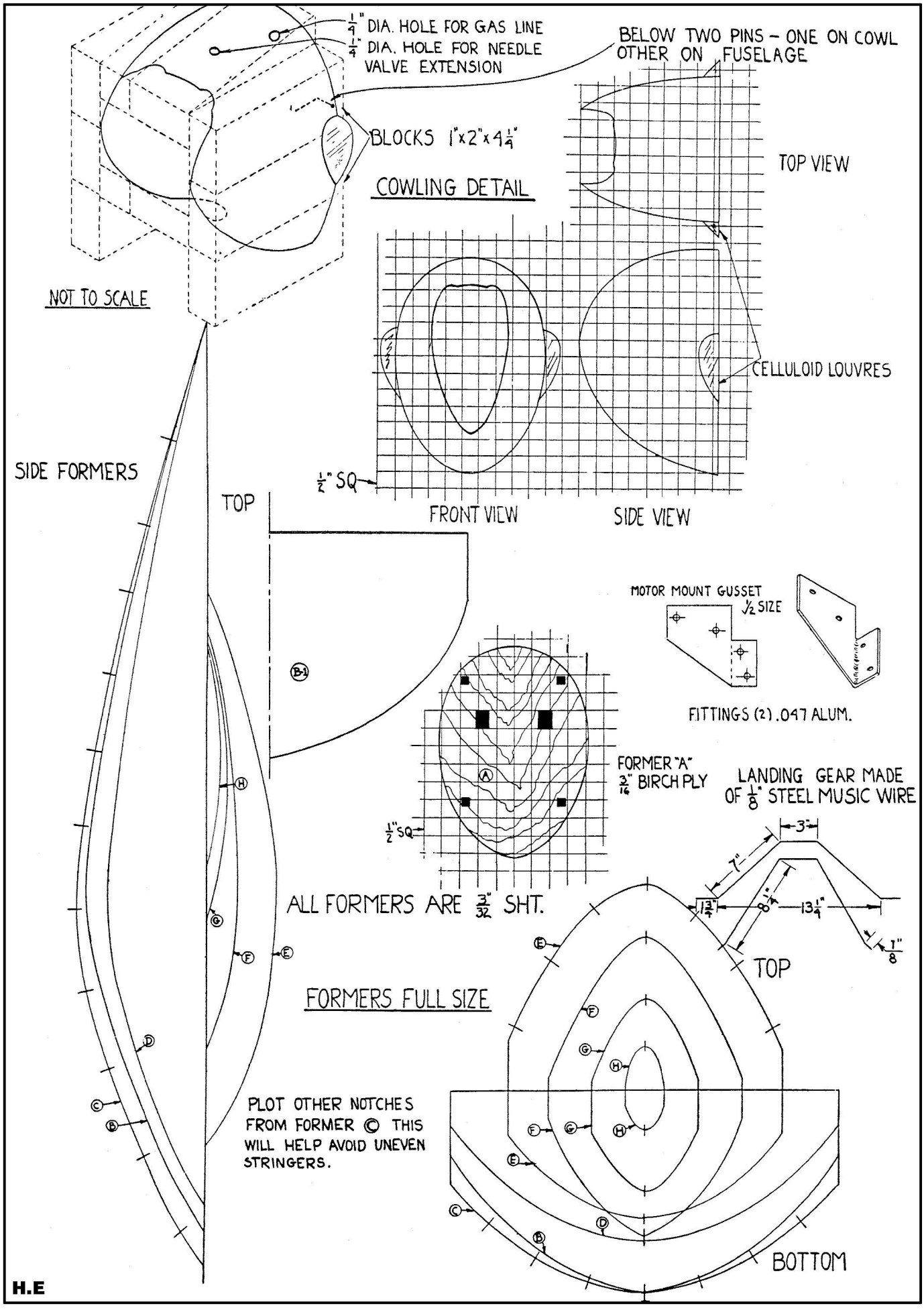

ORDER PLAN CF-466

FULL SIZE PLAN AVAILABLE THROUGH CARSTENS FLYING PLANS