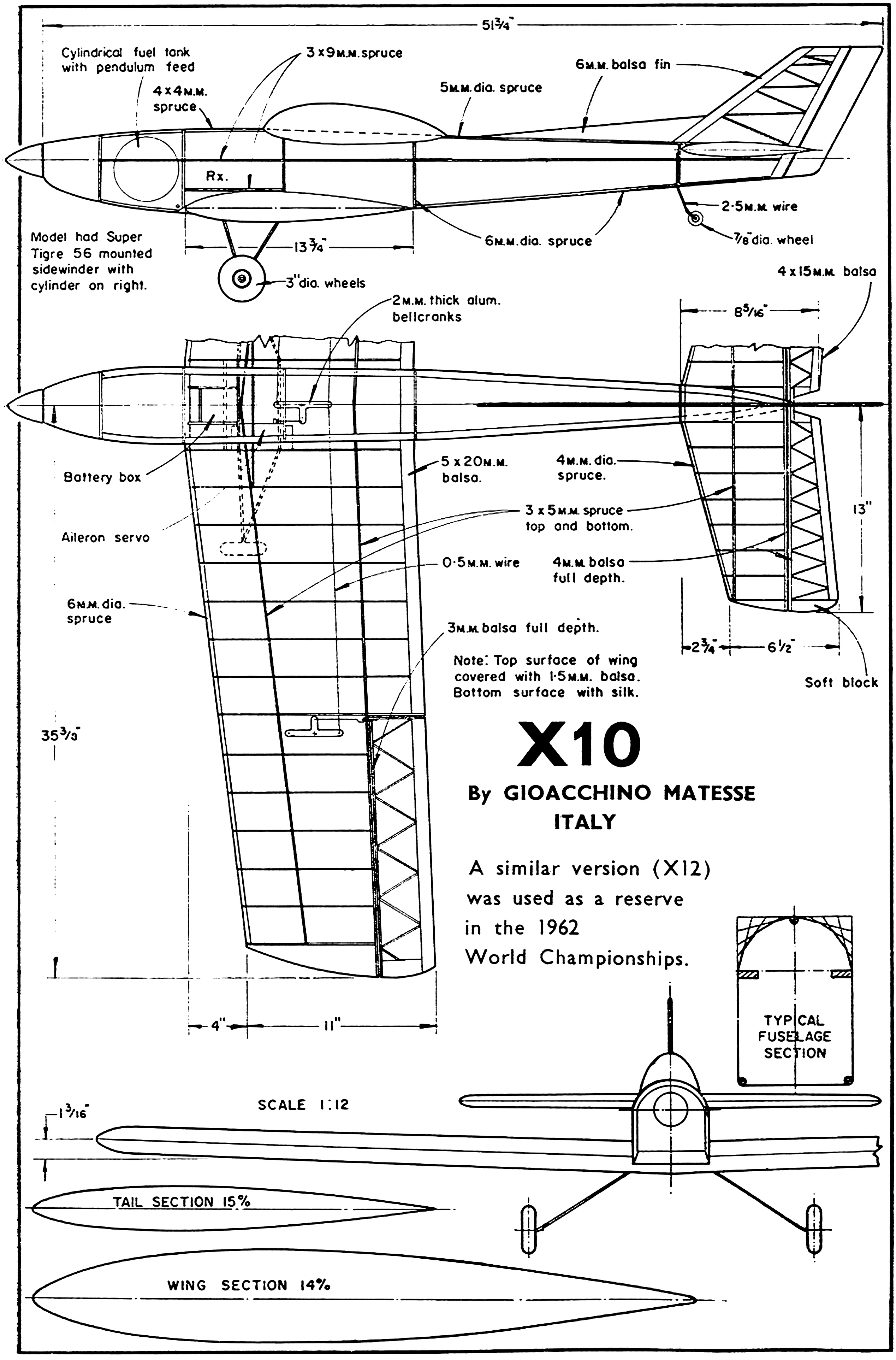
51¾"
Cylindrical fuel tank with pendulum feed
3 x 9 M.M. spruce
6 M.M. balsa fin
4 x 4 M.M. spruce
5 M.M. dia. spruce
Rx.
2·5 M.M. wire
Model had Super Tigre 56 mounted sidewinder with cylinder on right.
13¾"
6 M.M. dia. spruce
7/8" dia. wheel
3" dia. wheels
4 x 15 M.M. balsa
2 M.M. thick alum. bellcranks
8 5/16"
Battery box
5 x 20 M.M. balsa.
4 M.M. dia. spruce.
3 x 5 M.M. spruce top and bottom.
13"
Aileron servo
0·5 M.M. wire
4 M.M. balsa full depth.
6 M.M. dia. spruce
3 M.M. balsa full depth.
2¾"
6½"
Note: Top surface of wing covered with 1·5 M.M. balsa. Bottom surface with silk.
Soft block
35 3/8"
X10
By GIOACCHINO MATESSE
ITALY
A similar version (X12) was used as a reserve in the 1962 World Championships.
TYPICAL FUSELAGE SECTION
4"
11"
SCALE 1:12
1 3/16"
TAIL SECTION 15%
WING SECTION 14%

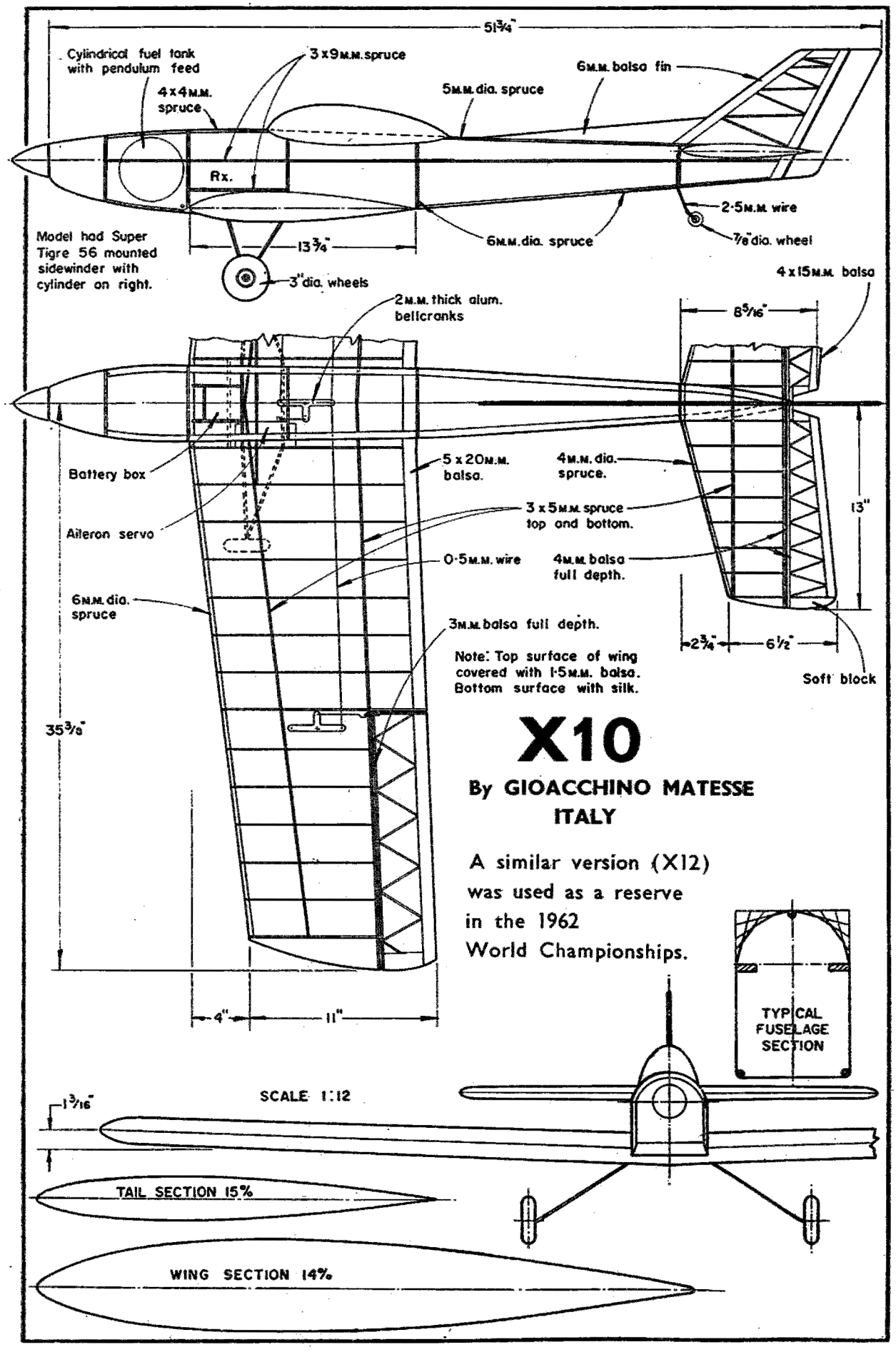
51¾"
Cylindrical fuel tank with pendulum feed
3 x 9 M.M. spruce
4 x 4 M.M. spruce
5 M.M. dia. spruce
6 M.M. balsa fin
Rx.
2·5 M.M. wire
Model had Super Tigre 56 mounted sidewinder with cylinder on right.
13¾"
6 M.M. dia. spruce
⅞" dia. wheel
3" dia. wheels
4 x 15 M.M. balsa
2 M.M. thick alum. bellcranks
8 5/16"
Battery box
5 x 20 M.M. balsa.
4 M.M. dia. spruce.
3 x 5 M.M. spruce top and bottom.
13"
Aileron servo
0·5 M.M. wire
4 M.M. balsa full depth.
6 M.M. dia. spruce
3 M.M. balsa full depth.
2¾"
6½"
Note: Top surface of wing covered with 1·5 M.M. balsa. Bottom surface with silk.
Soft block
35⅜"
X10
By GIOACCHINO MATESSE
ITALY
A similar version (X12) was used as a reserve in the 1962 World Championships.
TYPICAL FUSELAGE SECTION
4"
11"
SCALE 1:12
1 3/16"
TAIL SECTION 15%
WING SECTION 14%