HANRIOT HD-1

designed by
BOB WRIGHT

R/C Scale Aircraft Plans Service

A 1/4 SCALE MODEL FOR 25-40 MOTORS.

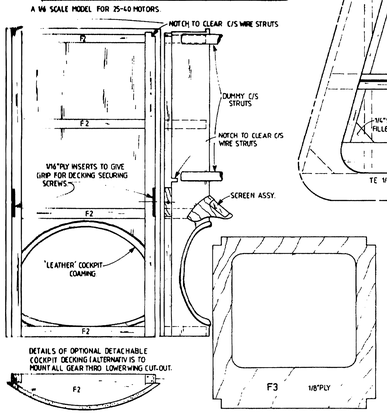

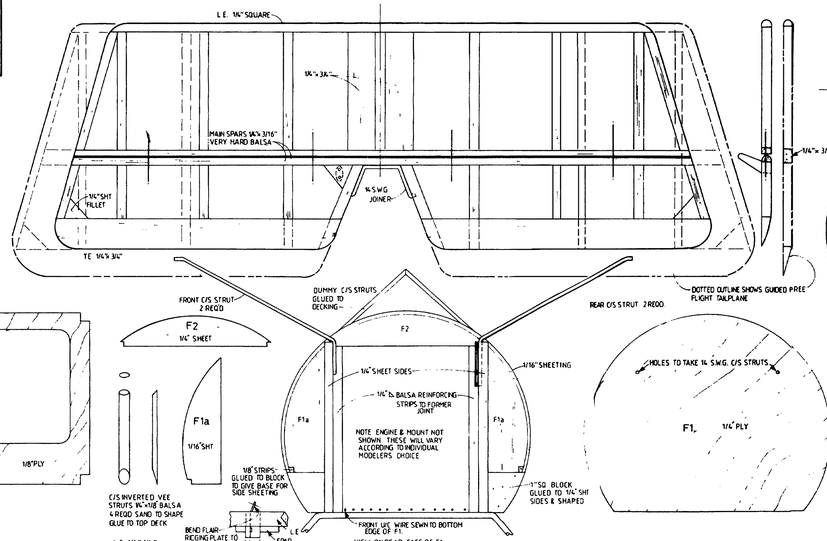

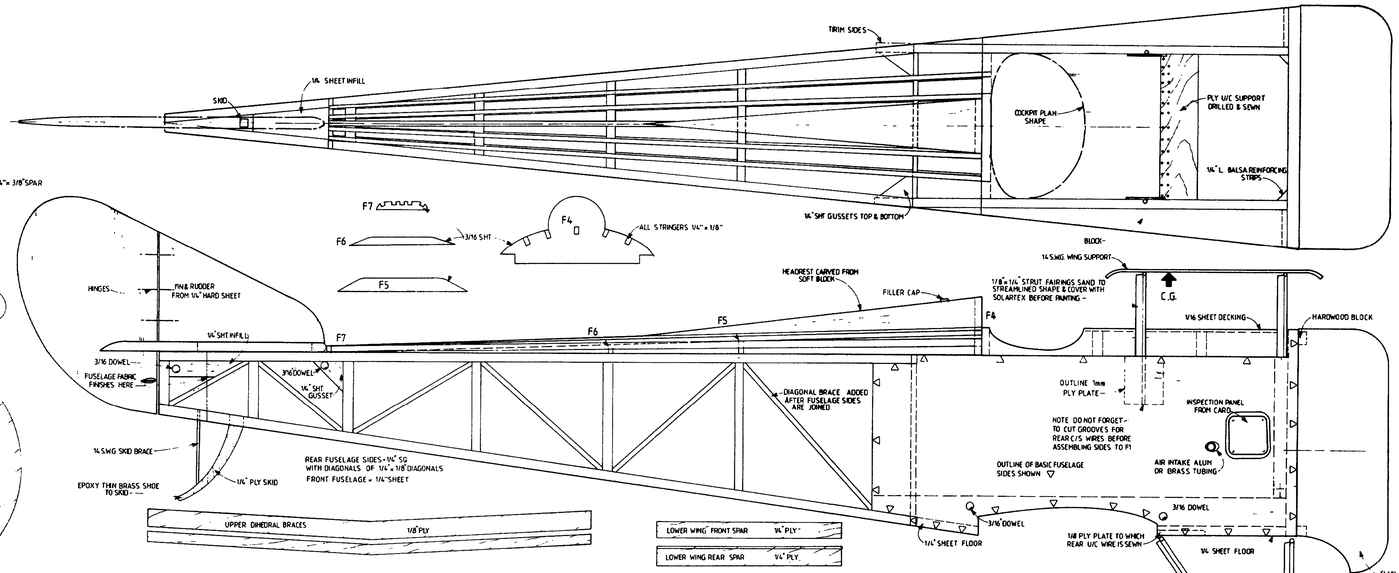

ASSEMBLY OF WINDSCREEN: CYNO TRANSPARENT SHEET TO REAR FRAME THEN CYNO TO REAR OF MAINFRAME SO THAT TRANSPARANCY IS SANDWICHED. CUT SLOTS IN DECKING & GLUE ASSY IN PLACE.

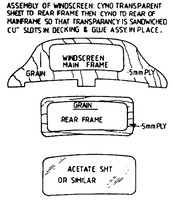

INTERPLANE STRUTS 1/8" x 1/2" OBECHI SAND TO STREAMLINED SECTION.

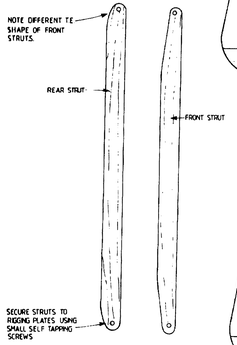

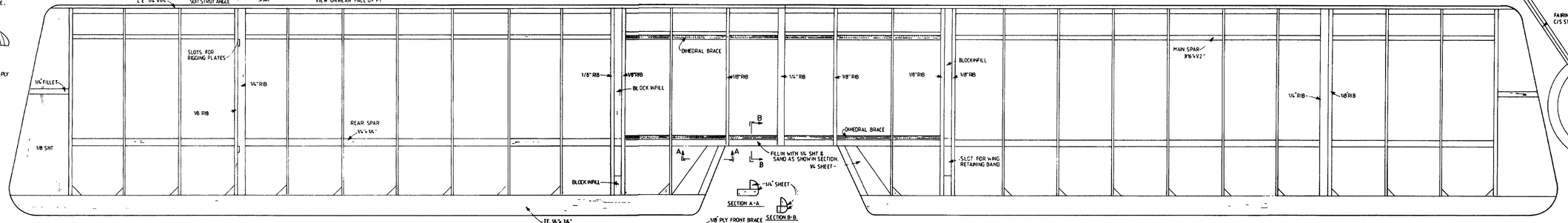

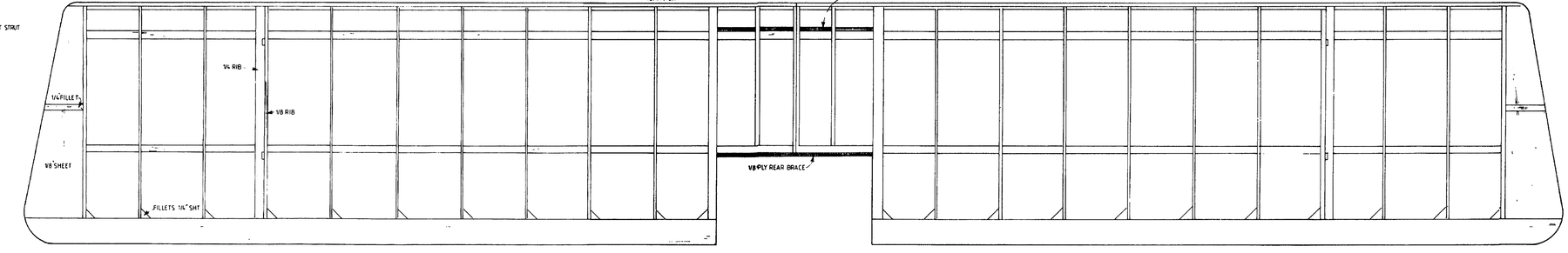

WING TIP CONSTRUCTION.
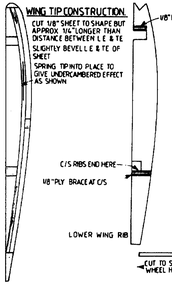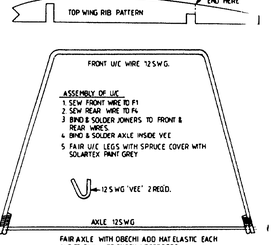
CUT 1/8" SHEET TO SHAPE BUT APPROX. 1/4" LONGER THAN DISTANCE BETWEEN L.E. & T.E. SLIGHTLY BEVEL L.E. & T.E. OF SHEET. SPRING TIP INTO PLACE TO GIVE UNDERCAMBERED EFFECT AS SHOWN.