GENERAL INFORMATION & PRE-CONSTRUCTION NOTE

The Customized Ringmaster kit was developed and produced to help model builders create and experiment with scale models and to stimulate original design thinking. On the plans appear many different wing tips, tail surfaces and other design features which can be used in any combination, since the basic design of the Ringmaster has been tested and performance is assured, plus whatever variation you may choose. For general assembly and construction procedure, use the Ringmaster plan appearing on the right. Instructions for individual suggested models can be followed as given or adjusted to suit the builder's preference. Each design unit (wing tips, tail, etc.) is numbered. It's own assembly sketch and instructions. Deviations made to them in description of models described on plan. There are certain rules that apply to all models: Keep the thrust line parallel to front control line; wing and tail surfaces must be aligned properly to each other when viewed from front or top; wing and tail surfaces must be free of warps. Check controls before each flight for free, easy movement. Examine the plans carefully, including the various design units and their sketches before cutting out the kit parts. We will welcome a letter from you on your experiences with the Customized Ringmaster kit and in return we will mail to you (no charge), at your request, our booklet - Model Building Secrets - which contains hints on covering and finishing, general construction, engine operation, and many other subjects, also our complete catalog.

SUPER STUNT RINGMASTER

To achieve maximum performance, use wing tip #1 or wing tip #2. This will increase span of wing to 50" and and approximately 60 sq. in. of wing area. See detail for assembly instructions. Use fail group #1, #2, or #3. Single or twin rudder is optional. For Super Stunt performance, use single rudder. Rudder and fin are described in full size drawing. Paint and apply decals as desired. Recommended engine size for Super Stunt Ringmaster is .29 or .35. Mount on right side of fuselage, using Veco T28A or similar type fuel tank. Install landing gear as shown in detail note. Install pilot and canopy as shown in detail note.

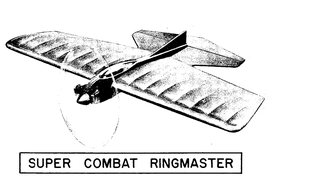

SUPER COMBAT RINGMASTER

Trim fuselage and plywood doublers to shape shown on #2 fuselage design. Cut triangular rudder shape in fuselage drawing and cement in place, angled 1/2" to outside of circle flown. Drill hole as shown for streamer attachment. Landing gear is omitted in Combat Model. Build wing tip as described in detail note for maximum speed and maneuverability, ribs 8, 9 and 10 are eliminated, thus removing 3 panels from each tip. Use wing tip #5 or #6. Roll crank in installed on left side of center rib between ribs 5 & 2. Rib 3 must be bevelled out similar to rib 1 for bell crank. Install 2 oz. of 4 ounce tank such as Veco T12D, T15E (combat pressure) or T25D or T25E, or similar type, in wing, behind leading edge on right side of rib 1. Trim out if necessary and wedge in place with scrap balsa. Drill hole through leading edge for fuel feed line. Cut out holes for fill and over-flow tubes in sheet balsa when covering center section. After wing is assembled, install and adjust pushrod and elevator. Stabilizer is cemented directly to rear of wing. Don't forget to add the 1 ounce weight to the right wing tip before covering the wing. Make sure controls operate free and easy. Model can now be painted to suit, and pilot and canopy installed as desired.

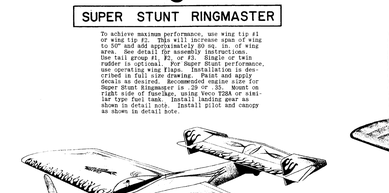

FLYING MAN RINGMASTER

Ringmaster Flying Man is one of the most colorful and unusual type of control line models ever devised. The article below which has been reprinted from the 1962 edition of American Modeler Annual (with permission of Cordo Nast Publications) shows the complete conversion of a standard Ringmaster to a Flying Man. In addition to the unusual appearance of the model, the flying qualities are just as start ling! The Ringmaster Flying Man can be made to do the Super Dancer, in which the weight of the model is balanced by the thrust of the engine, causing it to hover motionless in the air, or virtually motionless on the end of the flying lines, as explained in the article. The variations of Flying Man are endless. They can, of course, be changed to flying women too, or you can use any comic strip figure as a basis. If you can take a photograph of your favorite comic character, you can make a Flying Man or Flying Woman out of it. Use a photo or any pictorial reference for the profile of the photograph. If necessary, cartoons or tracings can be enlarged to exact size desired by any photostat house. Duplications of dress, suit, or shoes can be made following the same general pattern as designs shown in article. The sky and your imagination are the only limits. Cut the 6" balsa to proper length to fit head shape and cement together. Sand to approximate shape. Trim off side to match curve of top front of head. Cement 1/32 x 3 x 24 balsa to top. Through experience we calls for full length plywood doublers, we recommend that the doublers furnished in the kit be used due to the excessive weight of additional plywood. Transfer drawing of head on plan to fuselage with carbon paper, then cut it out. Cement doublers in place as shown in fuselage drawing. Install 1/32 x 20 for stabilizer and 1/32 x 3 x 24 for elevator and rudder. Slot for stab shown on #1 fuselage drawing. Use 1/32 x 3 x 24 between wing and stabilizer. Cement 1/32 x 3 x 24 and 1/32 x 2 x 24 balsa to top of fuselage. Use 1/32 x 3 x 24 long and cement 2 sections together (cross-sheeting) to form double layer sheet, to be used for back. Sand covered wing tips are not good, strengthen tip by cementing 1/32 sheet balsa to each tip against rib 10. Install landing gear as shown on detail note. Balance of construction is according to Ringmaster plan and magazine article.

SUPER SPORT RINGMASTER

Our version of the Sport model is a real beauty. Trim off top and end of fuselage as shown in fuselage drawing #1. Install landing gear as shown in detail note. Make wheel pants and install wheels. Use Veco Pacer wheels (or fail wheel) and dummy air scoop as shown and described in detail note. Build regular Ringmaster wing. Wing #3 or #4 may be substituted for regular tip. Use tail #2 or #3 with single or twin rudder as desired. It is recommended that wing and tail surfaces match each other in general appearance. Use fin #2 for single rudder, and #3 with twin rudders. Install and drill 1/32" hole for top spar of landing gear struts and 1/8" holes for clamp bolts. Install landing gear struts and wheels. Wheel pants, etc. can be added for sporty appearance if desired. Paint and apply decals as desired. Install engines and Veco T28A (or similar type) fuel tank. Install pilot and canopy as shown in detail plans and canopies as described in detail note.

TWIN ENGINE RINGMASTER

In order to build the Twin Engine Ringmaster, it is necessary to purchase the extra material listed separately. Individual costs have been substantially lowered by purchasing in packaged deal. If package is not available at your dealer, order directly from Sterling Models, Hatfield, Pennsylvania & Winter Street, Philadelphia 44, Pa., U.S.A., including 25¢ for handling and postage. Build fail wing center section as described in detail note. Build regular Ringmaster wing, joining each half to center section. With .29 or .35 engines it is recommended that the large tips #1 or #2 be used. With .19 engines use regular Ringmaster tip or tip #3 or #4. Fuselage can be left as is or trimmed to the shape shown in fuselage drawing #2 for use with twin rudders. Install and drill 1/32" hole for top spar of landing gear struts and 1/8" holes for clamp bolts. Install landing gear struts and wheels. Wheel pants, etc. can be added for sporty appearance if desired. Paint and apply decals as desired. Install engines and Veco T28A (or similar type) fuel tank. Install pilot and canopy as shown in detail plans and canopies as described in detail note.

EXTRA PARTS REQUIRED FOR TWIN

2	Balsa Sheets 3/32 x 3 x 18	.24
2	Balsa Sheets 1/32 x 3 x 18 Sheet #2	.16
1 Spool	Thread	.20
1 "	Trailing Edge	.10
1 "	Spar	.05
1 Ringmaster	Fuselage	.50
1 "	Clear Plastic Canopy	.15
2 "	Motor Mounts	.06
2 Balsa Sheets 1/16 x 3 x 18		.10
1 3/32 Brass Wheel Bushings		.04
1 L. G. Clamps, Nuts & Bolts		.06
2 Landing Gear Struts		.15
Total cost of individual parts		2.52
Package Deal of All Parts		.25
Packing & Postage		.25
	TOTAL	2.23

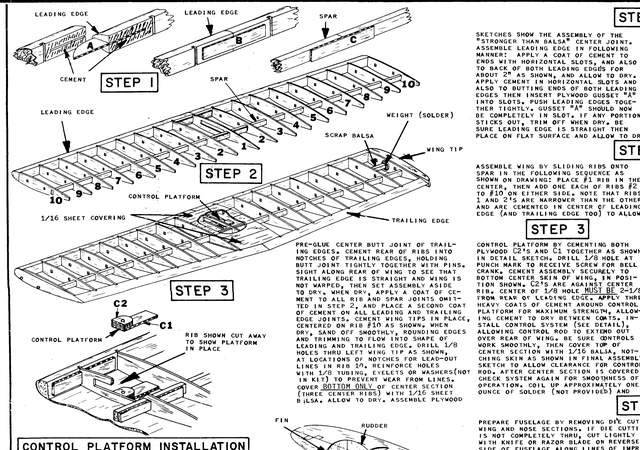

STEP 1

SKETCHES SHOW THE ASSEMBLY OF THE "STRONGER THAN BALSA" CENTER JOINT. ASSEMBLE LEADING EDGE IN FOLLOWING MANNER: APPLY A COAT OF CEMENT TO ENDS WITH HORIZONTAL SLOTS, AND ALSO TO BACK OF BOTH LEADING EDGES FOR ABOUT 2" AS SHOWN, AND ALLOW TO DRY. APPLY CEMENT IN HORIZONTAL SLOTS AND ALSO TO BUTTING ENDS OF BOTH LEADING EDGES. THEN INSERT PLYWOOD GUSSET "B" INTO SLOTS AND PUSH LEADING EDGES TOGETHER FIRMLY. GUSSET MUST NOW BE COMPLETELY IN SLOT. IF ANY PORTION STICKS OUT, TRIM OFF WITH KNIFE. MAKE SURE LEADING EDGE IS STRAIGHT THEN PLACE ON FLAT SURFACE AND ALLOW TO DRY THOROUGHLY. USE WEIGHTS TO KEEP LEADING EDGE STRAIGHT AND FLAT. WHEN DRY, CEMENT PLYWOOD GUSSET "B" CENTERED OVER JOINT. PRE-GLUE THE BUTTING ENDS AND BACK OF SPARS IN SAME MANNER AS LEADING EDGE. JOIN TOGETHER WITH SECOND GUSSET "C" CENTERED ACROSS JOINT AS SHOWN. BE SURE SPAR IS STRAIGHT THEN PLACE ON FLAT SURFACE. PLACE WEIGHTS ON TOP TO KEEP THEM FLAT. WHEN DRY, CEMENT TWO REMAINING GUSSETS "C" CENTERED ON BOTH ASSEMBLIES. WHEN UNITS ARE DRY, PLACE LEADING EDGE ON SPAR, PLACE PENCIL, MARK OFF NOTCH LOCATIONS (WHICH ARE THE LOCATION OF RIBS) ON SPAR.

STEP 2

ASSEMBLE WING BY SLIDING RIBS ONTO SPAR IN ORDER FOLLOWING SEQUENCE AS SHOWN ON DRAWING: PLACE #1 RIB IN THE CENTER, THEN ADD ONE EACH OF RIBS #2 TO #10 ON EITHER SIDE. NOTE THAT RIBS 1 AND 2 ARE DIFFERENT, RIB 1 HAS NOTCHES AND ARE CEMENTED TO BOTTOM OF LEADING EDGE (AND TRAILING EDGE TOO) TO ALLOW FOR THICKNESS OF SHEET BALSA COVERING. DO NOT CEMENT RIBS TO SPAR IN THIS STEP. RIBS ARE CEMENTED TO SPAR ONCE AFTER LEADING AND TRAILING EDGES ARE IN PLACE. THIS WILL ALLOW THE RIBS TO LINE UP CORRECTLY. CEMENT FRONT OF RIBS INTO NOTCHES IN LEADING EDGE.

STEP 3

CONTROL PLATFORM BY CEMENTING BOTH PLYWOOD C2'S AND C1 TOGETHER AS SHOWN IN DETAIL. WITH SPARE PIECE OF 1/8" DIA. PUNCH MARK TO RECEIVE SCREW FOR BELL CRANK, CEMENT ASSEMBLY TOGETHER TO BOTTOM CENTER SKIN OF WING, IN POSITION SHOWN. BE SURE AND PUNCH HOLE FOR 1/8" DIA. CENTER OF CLA HOLE. MUST BE 1/8" DIA. AND NOT 3/32" DIA. AS SHOWN. APPLY THREE HEAVY COATS OF CEMENT AROUND CONTROL PLATFORM FOR MAXIMUM STRENGTH, ALLOWING CEMENT TO DRY WELL BETWEEN COATS. INSTALL CONTROL SYSTEM (SEE DETAIL); SAND OFF SMOOTHLY, BEVELING EDGES AND TRIMMING TO FLOW INTO SHAPE OF LEADING AND TRAILING EDGE. DRILL 1/16 HOLES THRU LEFT WING TIP AS SHOWN. 4 LOCATIONS OF NOTCHES FOR LEAD-OUT LINES IN RIB 10. REINFORCE HOLES WITH 1/16 TURNING, OILETS OR WASHERS(NOT IN KIT) TO PREVENT WEAR FROM LINES. COVER ONLY OUTER 4 NOTCHES FOR SECTIONS (THREE CENTER RIBS) WITH 1/16 SHEET BLSA. ALLOW TO DRY. ASSEMBLE PLYWOOD CEMENT TO RIB 10 ON RIGHT SIDE OF WING AS SHOWN. WEDGE SOLDER IN PLACE WITH SCRAP BALSA, THEN APPLY TWO HEAVY COATS OF CEMENT TO PREVENT WEIGHT FROM BREAKING LOOSE. CHECK AND SAND ENTIRE WING SMOOTH TO PREPARE FOR COVERING. COVER WING WITH SHEET (2 TOP AND 2 BOTTOM) WITH SILKSPAN TISSUE PROVIDED, GRAIN RUNNING SPANWISE. SAND SMOOTH OUT TISSUE. CUT PIECES ABOUT 1" LARGER THAN OUTLINE OF WING. PLACE PIECE ON FLAT SURFACE AND MOISTEN WITH WET CLOTH. THIS WILL REMOVE ALL WRINKLES. PUT FRAME OVER TISSUE IS WET, GENTLY PULLING IT SMOOTH. WHEN DRY, TISSUE WILL SHRINK TO GIVE TIGHT SMOOTHNESS. APPLY TWO COATS OF CLEAR DOPE, LETTING DRY BETWEEN COATS WHILE DOPE IS DRYING. IF WING WARPS, IT CAN BE STRAIGHTENED OUT BY APPLYING AN ADDITIONAL COAT OF DOPE AND TWISTING WING IN OPPOSITE DIRECTION HOLDING UNTIL DRY.

STEP 4

PREPARE FUSELAGE BY REMOVING DIE CUT WING AND MOTOR SECTIONS. IF DIE CUTTING IS NOT COMPLETELY THRU, CUT LIGHTLY WITH KNIFE. PRE-GLUE ON BLACK ON REVERSE SIDE OF FUSELAGE ALONG LINES OF IMPRESSION AS SHOWN IN SKETCH. THEN CEMENT FULLY PUSH OUT SECTION. DRAWINGS AND SKETCHES ARE ILLUSTRATIVE ONLY. ADJUSTABLE FOR K & B .35 OR SIMILAR ENGINES. IF ANY OTHER ENGINE IS USED, IT MAY BE NECESSARY TO WIDEN OR NARROW THE DISTANCE BETWEEN MOUNTS, TO MAKE NARROW, SUBSTITUTE WIDER PIECES OF WOOD. TO WIDEN, MOUNT MUST BE MOVED IN. ENGINE MOUNTS WIDER APART. PRE-GLUE BOTH PLYWOOD 1/8" ANGLE TO BOTTOM SIDES OF FUSELAGE. WHEN DRY, CEMENT ONE F2 IN PLACE AS SHOWN. THREE ENGINE MOUNTS ARE THEN SECURELY ASSEMBLED. ALIGN ENGINE MOUNTS AS SHOWN IN DRAWING: THEN SECURELY CEMENT IN PLACE. APPLY TWO HEAVY COATS OF CEMENT ON ALL JOINTS AROUND HARDWOOD ENGINE MOUNTS, ALLOWING CEMENT TIME FOR CEMENT TO DRY BETWEEN COATS. CEMENT F2 IN PLACE. CHECK ASSEMBLY AGAINST ENGINE TO MAKE SURE ITS STREAMLINED APPEARANCE, AS WELL AS INCREASED EFFICIENCY, IT IS ADVISABLE TO ROUND OFF FUSELAGE TO THE APPROXIMATE CROSS SECTION SHOWN IN SKETCH IF A NECESSITY. BUT WILL INCREASE THE BEAUTY AND PERFORMANCE OF THE MODEL. BE CERTAIN YOU DO NOT SAND OFF ANY OF THE FLAT SECTION AT REAR OF ENGINE OR THE FUSELAGE SINCE IT PROVIDES A GLUING SURFACE FOR THE TAIL BOOM. PREPARE STABILIZER AND ELEVATOR UNIT AS SHOWN IN DETAIL SKETCH. CEMENT TOGETHER HORIZONTALLY TO FUSELAGE. NOTE: STABILIZER PORTION ONLY IS CEMENTED TO FUSELAGE. ELEVATOR EXTENDS BEYOND FUSELAGE AS SHOWN. BE SURE TO ALLOW TO DRY THOROUGHLY. CEMENT RUDDER AND FIN TOGETHER AT 90° ANGLE SO THAT RUDDER SECTION IS OFF SET 1/2". WHEN DRY, ROUND OFF EDGES AND CUT OUT TRIANGULAR SHAPE FOR CLEARANCE. CEMENT RUDDER ASSEMBLY IN PLACE. ALIGN SECTION EDGES TOWARD RIGHT WHICH IS OUTSIDE OF CIRCLE FLOWN AS SHOWN IN SCALE DRAWINGS. BE CERTAIN THAT RUDDER IS IN LINE WITH FUSELAGE VERTICALLY, AND THAT STABILIZER AND ELEVATOR ARE HORIZONTAL. ALSO IMPORTANT: USE THREE HEAVY COATS OF CEMENT ON JOINTS, ALLOWING CEMENT TO DRY BETWEEN COATS.

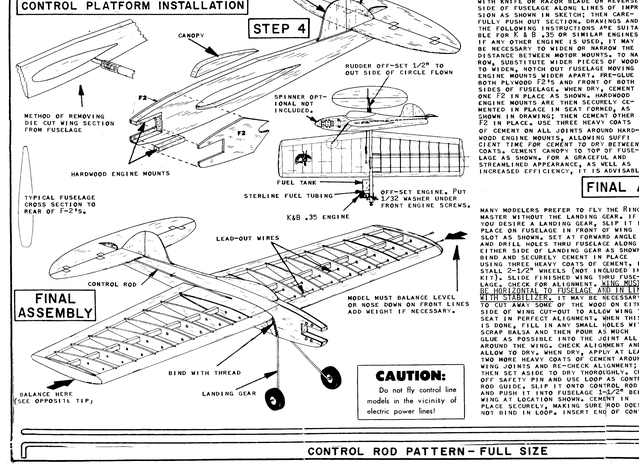

CAUTION: Do not fly control line models in the vicinity of electric power lines!

FINAL ASSEMBLY

MANY MODELERS PREFER TO FLY THE RINGMASTER WITHOUT THE LANDING GEAR. IF YOU DESIRE A LANDING GEAR, FIT IT IN PLACE ON FUSELAGE IN FRONT OF WING PANEL. SPACE SET AT FORWARD ANGLE AND DRILL HOLES THRU FUSELAGE ALONG ROOT LINE OF LANDING GEAR AS SHOWN. BIND AND SECURELY CEMENT IN PLACE USING THREE COATS OF CEMENT. INSTALL 2-1/2" WHEELS (NOT INCLUDED, KIT 1); SLOW FINISHED WING THRU FUSELAGE. CHECK FOR ALIGNMENT. WHEN THREE HEAVY COATS OF CEMENT HAVE DRIED, IT MAY BE NECESSARY TO CUT AWAY SOME OF THE WOOD ON EITHER SIDE OF WING CUT-OUT TO ALLOW WING TO SEAT IN PERFECT ALIGNMENT. WHEN THIS IS DONE, FIT IN ANY SMALL GAPS WITH SCRAP BALSA AND THEN POUR AS MUCH GLUE AS POSSIBLE INTO THE JOINT AROUND THE WING. CHECK ALIGNMENT AND ALLOW TO DRY. WHEN DRY, APPLY AT LEAST TWO MORE HEAVY COATS OF CEMENT AROUND WING JOINTS AND RE-CHECK ALIGNMENT; THEN SET ASIDE TO DRY THOROUGHLY. CUT OFF SAFETY PIN AND USE LOOP AS CONTROL ROD GUIDE. SLIP IT ONTO CONTROL ROD AND PUSH IT INTO FUSELAGE 1-1/2" BEHIND WING AT LOCATION SHOWN. CEMENT IN PLACE SECURELY, MAKING SURE ROD DOES NOT BIND IN LOOP. INSERT END OF CONTROL ROD THRU HOLE IN ELEVATOR HORN. SOLDER WASHER ON END OF ROD SO IT DOES NOT COME OUT OF HORN. ALIGN ELEVATOR FOR SMOOTHNESS OF OPERATION. SAND ENTIRE MODEL SMOOTH TO PREPARE FOR COVERING. APPLY TWO COATS OF CLEAR DOPE TO ALL SURFACES. CONTROL SURFACES ARE INDIVIDUAL MODEL SPECIFICATIONS. DRILL 1/16 HOLES AND ATTACH LOWER WINGS AND TAIL. ** DECAL FUSELAGE (F2'S) - BLACK, RUDDER - WHITE, GOAL RINGMASTER DECAL (SUPPLIED IN KIT) ON RUDDER. DECAL (SUPPLIED IN KIT) ON WINGS. ATTACH MORE OF MOUNTING HOLES. DRILL 1/8 HOLES THRU FUSELAGE FOR MOUNTING ENGINE WITH 4/40 MACHINE SCREWS (NOT SUPPLIED IN KIT). ATTACH TANK (SUPPLIED IN KIT) OR VECO T28A FUEL TANK (NOT SUPPLIED IN KIT) AS SHOWN IN DRAWING. FOR ENGINE, SO THAT FUEL TUBING DOES NOT TOUCH ENGINE. IF TANK DOES NOT HAVE MOUNTS, SOLDER STRIP OF METAL (CUT FROM TIN CAN) TO RE-CHECK ALIGNMENT; HOLES AT EACH END THEN BOLT TO FUSELAGE SO THAT CENTER OF TANK IS IN LINE WITH CENTER OF ENGINE. USE A 10-6 OR 9-8 PROPELLER (NOT SUPPLIED IN KIT) AND TIGHTEN SECURELY ON ENGINE SHAFT. YOUR RINGMASTER IS NOW COMPLETE. GOOD LUCK!! GOOD FLYING!!

CONTROL SYSTEM INSTALLATION

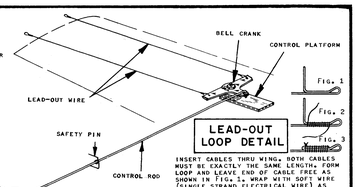

INSERT CABLES THRU WING. BOTH CABLES MUST BE EXACTLY THE SAME LENGTH FROM LOOP AND LEAVE END OF CABLE FREE. ASSEMBLE LEAD-OUT WIRE (SINGLE STRAND ELECTRICAL WIRE) AS SHOWN IN FIG. 2, BEND BACK END OF CABLE AND CONTINUE BENDING. TWIST ENDS OF SOFT WIRE SECURELY TOGETHER AS SHOWN IN FIG. 3. DO NOT SOLDER.

THE CONTROL MECHANISM IS NOT INCLUDED IN KIT, BUT MUST BE PURCHASED SEPARATELY. SKETCH SHOWS PERFECT LARGE BELL CRANK, ANY SIMILAR ONE (B& BE USED). BEND THE CONTROL ROD FROM 3/32 WIRE (NOT PROVIDED). FOR EXACT SHAPE OF FULL SIZE PATTERN ON PLAN. SLIP WASHER ON FRONT OF CONTROL ROD THEN INSERT ROD INTO BELL CRANK. SOLDER WASHER TO TOP OF ROD, AND ANOTHER WASHER TO ROD BELOW BELL CRANK TO SECURE IN PLACE. SLIP LIGHT PIECE OF CARDBOARD BETWEEN BELL CRANK AND WASHER BEFORE SOLDERING TO PROVIDE CLEARANCE SO THAT BELL CRANK PIVOTS FREELY AFTER WASHERS MADE PERFECTLY SECURE. PLACE THEN REMOVE CARDBOARD. ATTACH CABLE LOOPS TO BELL CRANK ALIGNING FROM BELL CRANK PAST WING WHERE ARE LOBED THRU INNER HOLES IN ENDS OF BELL CRANK AS SHOWN. CUT OFF BELL CRANK TIPS TO CLEAR CUT OUT IN RIB 10. (ALL SIZES MUST BE 2-3/4" APART, 1-1/2 ON EACH SIDE OF CENTER). IF ANY OTHER BELL CRANK IS USED, IT MAY BE NECESSARY TO DRILL NEW HOLES.) LOOPS MUST BE LARGE END UP TO ALLOW BELL CRANK TO MOVE FREELY. WRAP WITH SOFT WIRE AND SOLDER SECURELY. INSTALL BELL CRANK TO CONTROL ROD PLATFORM AS DESCRIBED IN STEP 3, ACCORDING TO MANUFACTURERS INSTRUCTIONS. TEMPORARILY HOLD BELL CRANK IN NEUTRAL POSITION AS SHOWN ON TOP VIEW DRAWING, THEN MAKE LOOPS IN ENDS OF LEAD-OUT CABLES AS DESCRIBED IN DETAIL NOTE, DO NOT SOLDER. BOTH LEAD-OUT CABLES MUST BE EXACTLY THE SAME LENGTH AND EXTEND ABOUT 3" PAST WING TIP. TO RELEASE BELL CRANK AND CHECK SYSTEM TO SEE THAT IT OPERATES SMOOTHLY AND FREELY, AND DOES NOT BIND, WING TIP SECTION CAN NOW BE COVERED AS DESCRIBED IN STEP 3. AFTER WING IS INSTALLED IN FUSELAGE, HOOK UP CONTROL ROD AS DESCRIBED IN FINAL ASSEMBLY. ADJUST LOOPS SO THAT WHEN BELL CRANK PIVOTS, ELEVATOR WILL BE IN NEUTRAL POSITION AS SHOWN ON SIDE VIEW DRAWING, WHEN BELL CRANK COMING OUT OF WING ARE EXACTLY THE SAME DISTANCE FROM THE WING TIPS. BE CERTAIN TO CHECK THAT CONTROLS ARE LOOSE AND EASILY BEFORE RELEASING MODEL ON EVERY FLIGHT.

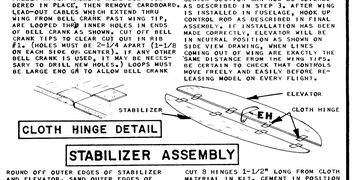

STABILIZER ASSEMBLY

ROUND OFF OUTER EDGES OF STABILIZER AND ELEVATOR. SAND OUTER EDGES OF RUDDER (DF). DRILL 1/16 HOLES AT PUNCH MARK. THEN CEMENT INTO SLOT IN ELEVATOR. BE SURE FRONT OF HORN CLEARS STABILIZER WHEN ASSEMBLED. APPLY THREE COATS OF CEMENT TO HORN AND ALLOW TO DRY, MAKING SURE IT IS VERTICAL TO ELEVATOR. ASSEMBLE STABILIZER AND ELEVATOR WITH CLOTH HINGES USING METHOD SHOWN IN DETAIL SKETCH. CUT 8 HINGES 1-1/2" LONG FROM CLOTH MATERIAL IN KIT. CEMENT IN POSITION SHOWN IN DETAIL SKETCH, USING METHOD SHOWN ABOVE AND DESCRIBED. HINGES ARE SECURELY CEMENTED ON TOP AND BOTTOM ONLY. BE SURE CEMENT DOES NOT GO ON HINGE BETWEEN ELEVATOR AND STABILIZER. ALLOW TO DRY THOROUGHLY. UNIT IS NOW READY TO BE INSTALLED AS DESCRIBED IN FINAL ASSEMBLY.

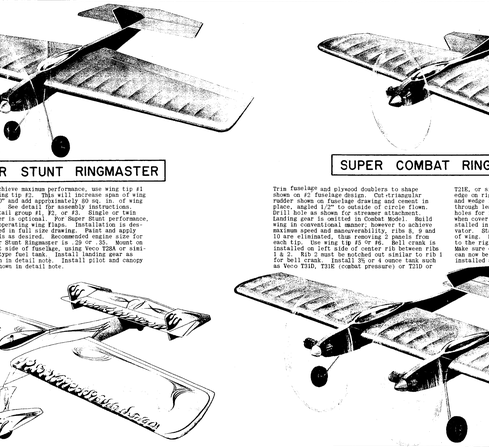

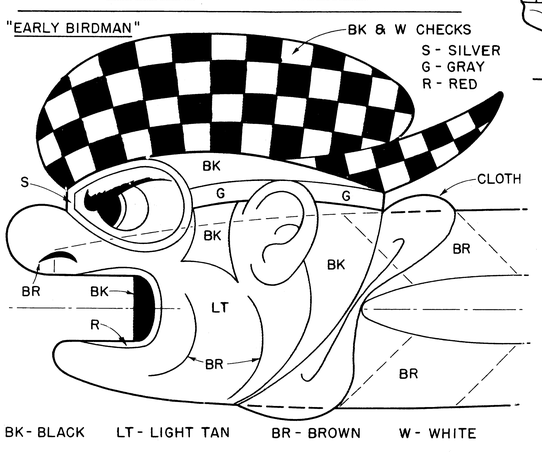

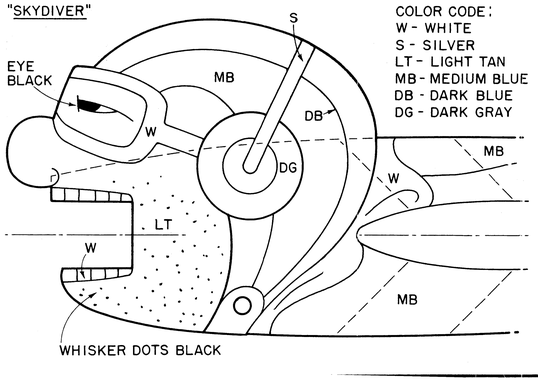

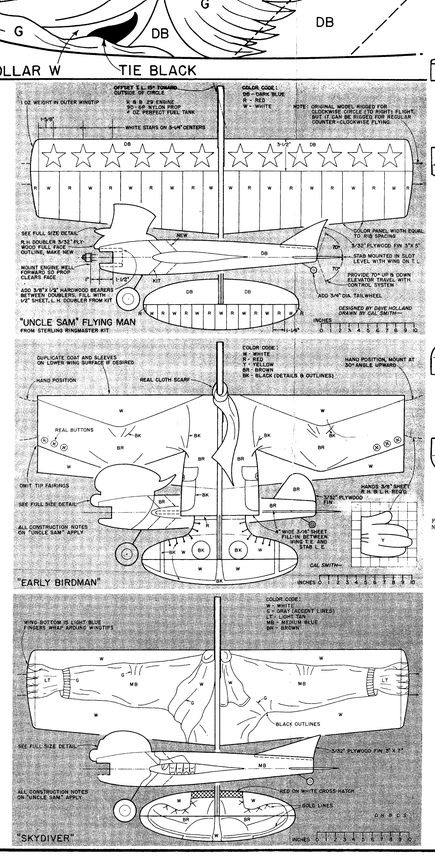

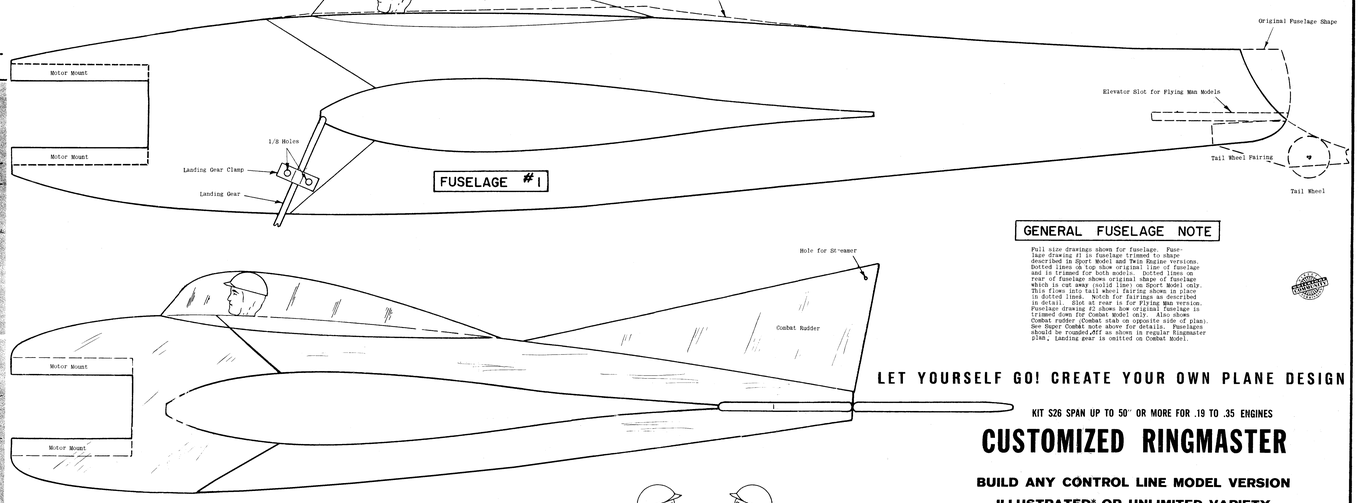

GENERAL FUSELAGE NOTE

Full size drawings shown for fuselage. Fuselage drawing #1 is fuselage trimmed to shape described in Sport Model and Twin Engine versions. Dotted lines on top show original line of fuselage which is cut away (solid line) on Sport Model only. This flows into tail wheel fairing shown in place in dotted lines. Notch for fairings as described in detail. Slot at rear is for Flying Man version. Fuselage drawing #2 shows how original fuselage is trimmed for twin rudders. Slot at rear is for Combat rudder (Combat stab on opposite side of plan). See Super Combat note above for details. Fuselages should be rounded off as shown in regular Ringmaster plan. Landing gear is omitted on Combat Model.

LET YOURSELF GO! CREATE YOUR OWN PLANE DESIGN

KIT S26 SPAN UP TO 50" OR MORE FOR .19 TO .35 ENGINES

CUSTOMIZED RINGMASTER

BUILD ANY CONTROL LINE MODEL VERSION ILLUSTRATED* OR UNLIMITED VARIETY

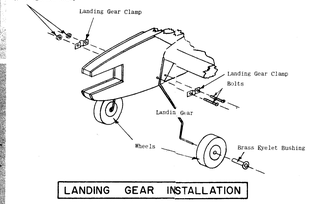

LANDING GEAR INSTALLATION

Slip formed landing gear in place through fuselage cut-out before installing wing. Locate and drill 1/8 holes for clamp screws at position shown on #1 fuselage drawing. Securely tighten clamp bolts. Bend wire to shape to fuselage cover landing gear with nuts and bolts provided. Flat side of nut against clamp. Solder or cement nuts to prevent loosening. Insert brass eyelet bushing through wheels and slip wheels on axle. Wheels are secured with wheel retainers, which may be purchased at your hobby shop or wire bound around end of axle and soldered securely.

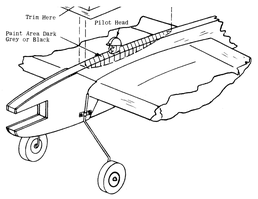

CANOPY INSTALLATION

Trim bottom of canopy. Locate and fit to fuselage in desired position. After model has been painted, place on fuselage and draw line at cockpit location. Area is then painted dark grey or black to simulate interior of cockpit. Remove canopy and paint area in cockpit place. Canopy is then securely cemented to fuselage, applying a neat bead of cement around bottom.

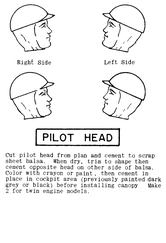

PILOT HEAD

Cut pilot head from plan and cement to scrap sheet balsa. When dry, trim to shape then cement opposite head on other side of balsa. Color with crayon or paint. Then cement in place in cockpit area (previously painted dark grey or black) before installing canopy. Make 2 for twin engine models.

WIN CONTESTS with your OWN creation

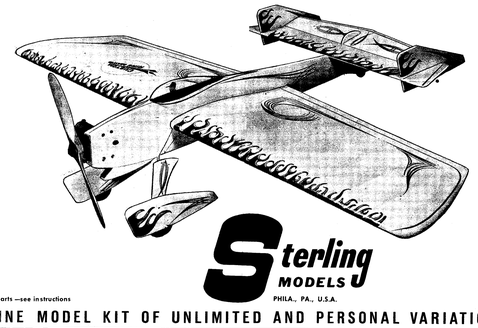

Sterling MODELS
PHILA., PA., U.S.A.

* Twin requires some extra parts —see instructions

CONTROL LINE MODEL KIT OF UNLIMITED AND PERSONAL VARIATIONS

RINGMASTER

FOR ENGINES .19 TO .35 DISPLACEMENT

KIT S-1
SPAN - 42"

Designed and Flight Tested For Stunt Flying

Photo of Model Built from Kit

Sterling models
Phila. Pa., U.S.A.

G13UA2VER

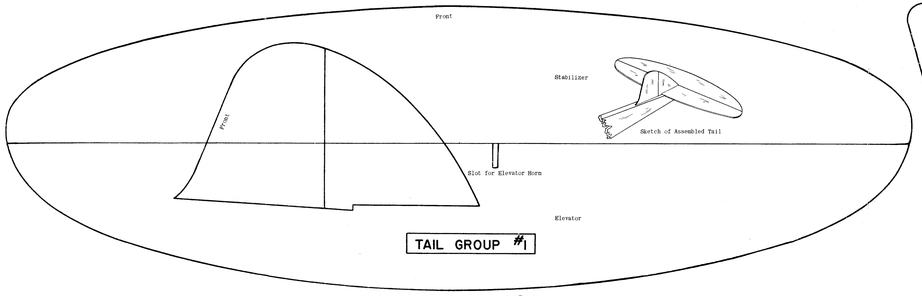

TAIL GROUP #1

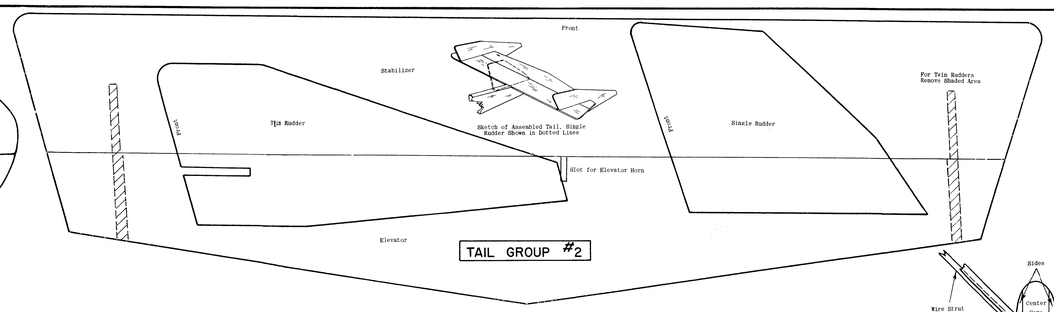

TAIL GROUP #2

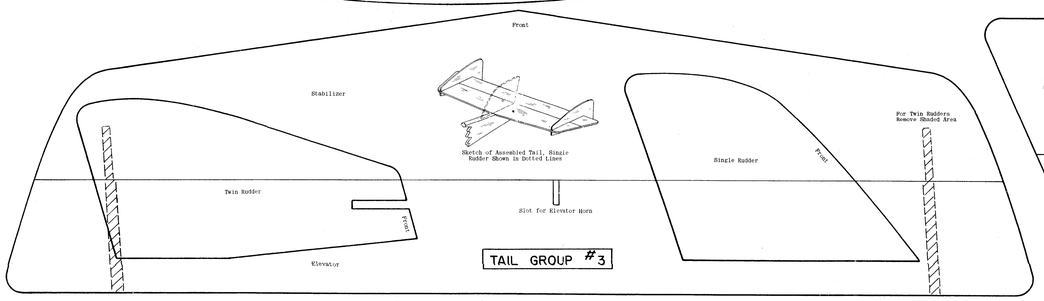

TAIL GROUP #3

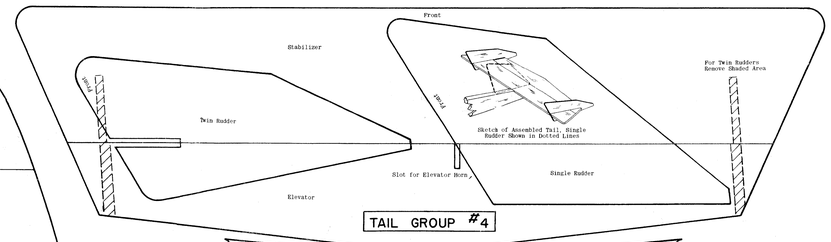

TAIL GROUP #4

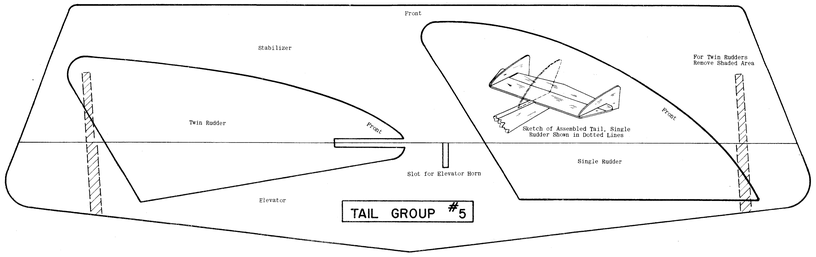

TAIL GROUP #5

GENERAL TAIL SURFACE ASSEMBLY DETAIL NOTE

Tail surfaces are all made from 3/32 sheet balsa. Trace on balsa from full size plan using carbon paper. Assemble and finish tail surfaces in accordance with stabilizer assembly instructions on Ringmaster plan and rudder instructions on Single Rudder plan. Cement tail sign of Elevator to bottom of Elevator, and of Stabilizer. Rudders are then cemented vertically in place into notches as shown in individual sketches. Shaded area is trimmed from hinged elevator so that it fits between rudders and moves freely. Specific use of each tail is noted in individual assembly sheets. Variations may be made and assembly sheets, with modifications desired. Off-set all rudders 5° to outside of circle flow.

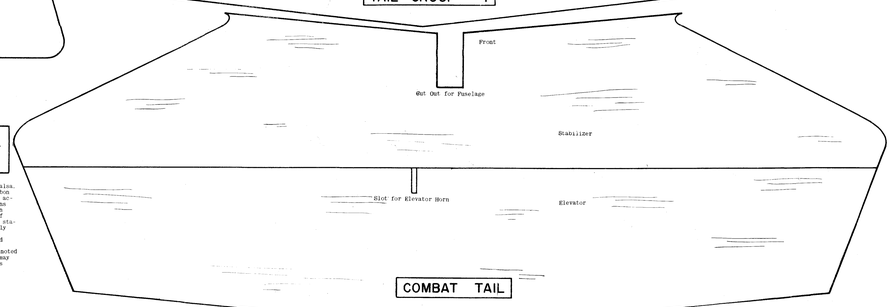

COMBAT TAIL

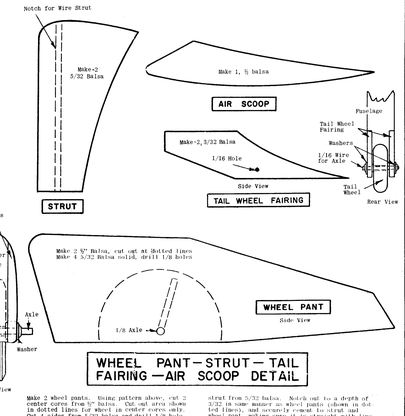

WHEEL PANT—STRUT—TAIL FAIRING—AIR SCOOP DETAIL

Make 2 wheel pants. Using pattern above, cut 2 center cores from ⅝" balsa. Cut out area shown in dotted lines for wheel in center cores only. Cut 4 sides from 3/32 balsa and drill 1/8 hole. Cement 2 sides and 1 core together and shape as shown in sketch. Repeat for other side. Cement notch in wire strut so that landing gear strut fits into it for a depth of about 3/32. This will locate and position wheel-pant on strut. Mount wheel-pants on strut by inserting axle in notched side of pant, then place wheel inside of pant and slide axle through hole in other side of pant. Solder washer to outside of axle to retain pant in place and securely cement strut into notch on opposite side. Cut out and shape landing gear strut from 3/32 balsa. Notch out to a depth of 3/32 in same manner as wheel pants (shown in dotted lines), and securely cement to strut and wheel pant, making sure it is straight with line of flight. Opposite side of landing gear is notched in same manner. Cut 2 tail wheel fairings from 3/32 balsa and cement together to provide a hollow fairing for axle. Cut tail wheel fairing at fuselage side as shown in fuselage fairings on fuselage side as shown in fuselage fit drawing and mark position, then notch out for thickness of fairings. Cement fairings in place on both sides of fuselage, then sand smooth and round off edges. Insert brass eyelet bushing in wheel line. Bend 1/16 wire for axle, soldering a washer on both sides of fairing to retain axle.

CAUTION:
Do not fly control line models in the vicinity of electric power lines!

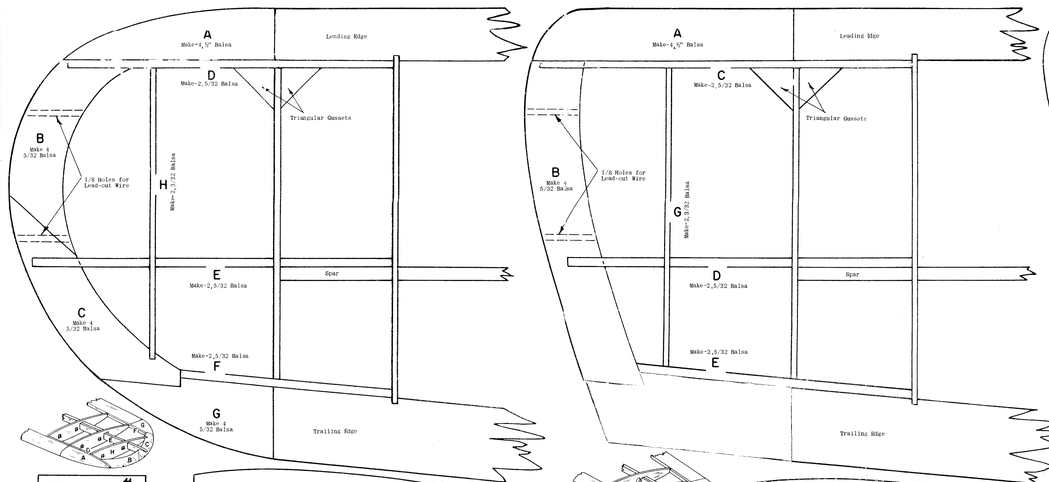

WING TIP #1

Using full size drawing as pattern, trace parts on balsa with carbon paper. Make 4 A's from ⅛" sheet; 4 each B, C & G from 3/32 sheet; 2 each D, E & F from 3/32 sheet; and 2 rib H from 3/32 sheet. Hold out for spar an additional 1/8" for rib H. Cement D to rear of leading edge and 3/32 from front and rear of rib #10 for B and F. Assemble tip by cementing D to rear of leading edge and F to front trailing edge. Insert E through rib #10 and cement to spar as shown on spar detail. Cement B to front of D and F to spars. Cement G only after E & C have been installed. Cement 2 A's together to form double layer and securely cement unit to leading edge and front of D. Cement together 2 B's, 2 C's and 2 G's, to form double layer. Cement in place to form tip as shown. Allow to dry thoroughly. Sand front of tip to match leading edge and trim rear to flow into triangular trailing edge. Opposite tip is built in same manner. Cut triangular gussets from 3/32 sheet and cement in place. Drill 1/8 holes for lead-out wire through left tip, only at location shown in dotted lines.

WING TIP #2

Trace parts on balsa sheet using carbon paper. Make the following parts: 4 A's from ⅛" sheet; 4 each B & G's from 3/32 sheet; 2 each C, D & E from 3/32 sheet; and 2 rib G's from 3/32 sheet. Cement B's, G's & F's together to form double layer. Hold out for spar an additional 1/8" of rib #10 for spars C & E and wide spar notch 3/32 for spar D. Cement C to rear of leading edge E to front of trailing edge as shown. Insert spar D through rib #10 and cement to ribs and spar as shown. Slip rib G on spar and cement in place. Cement A, B & F securely in place. Cut 2 triangular fillers from 3/32 sheet and cement on either side of rib #10. Allow to dry thoroughly. Sand front of tip to match leading edge and flow into E, which in turn flows into F, which is trimmed to triangular shape matching trailing edge. Opposite tip is made in same manner. Drill 1/8 holes for lead-out wire in left tip only at location shown by dotted line.

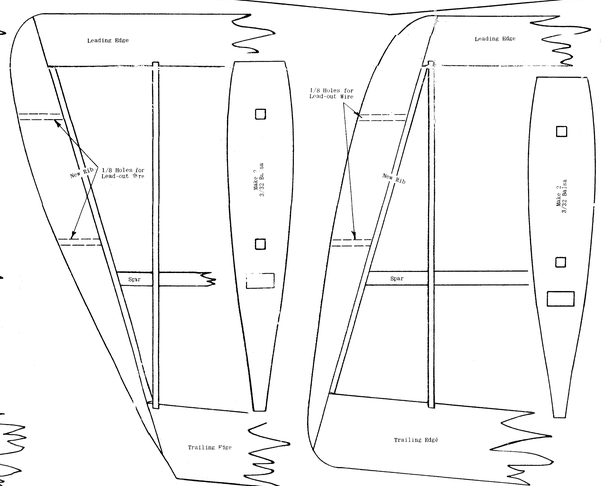

WING TIP #3

Using full size pattern cut 2 ribs from 3/32 sheet. Remove tip rib #10 from Ringmaster. Add and cement new rib diagonally from leading edge to trailing edge, 1 inch inboard of leading edge at location shown. Cut 2 ribs from 3/32 sheet using full size pattern shown, and cement shaped wing tip in place. Finish tip by rounding smooth in accordance with instructions on Ringmaster plan. Drill 1/8 hole at location shown on left tip for lead-out line.

WING TIP #4

Using full size drawing, cut 2 ribs from 3/32 sheet. Remove tip rib #10 and cement new rib #10 at location shown. Add rib #9 and cement 1/8" inboard of leading edge at location shown. Trim leading & trailing edge and spar in line with angle of new rib and cement shaped wing tip in place. Finish tip in accordance with instructions on Ringmaster plan. Drill 1/8 holes through left tip for lead-out cable.

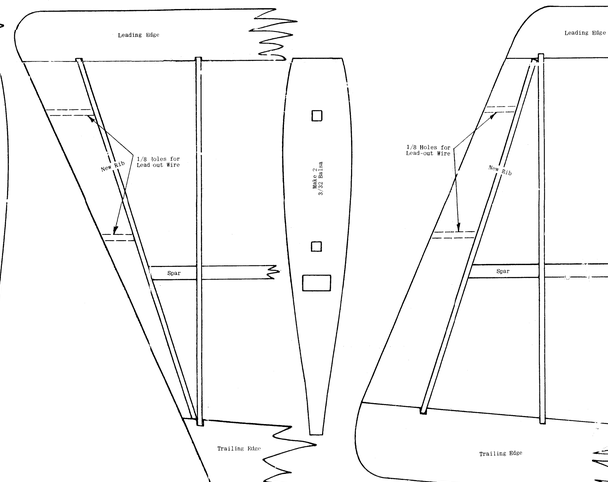

WING TIP #5

Wing tip shown is for clipped wing models only. Remove tip rib #10 and add rib #9 and 10 from regular Ringmaster wing which eliminates 2 panels. Cut 2 ribs from 3/32 sheet using full size pattern shown. Cement new rib into notch in leading edge where rib 8 would normally be, and to trailing edge against rib 7 as shown in full size drawing. Trim spar flush with rib 7. Add rib #9 and cement in place and cement in place against rib between leading and trailing edge. Trim leading and trailing edge to shape shown above and round smooth. Drill 1/8 holes through left tip only at location shown for lead-out cable.

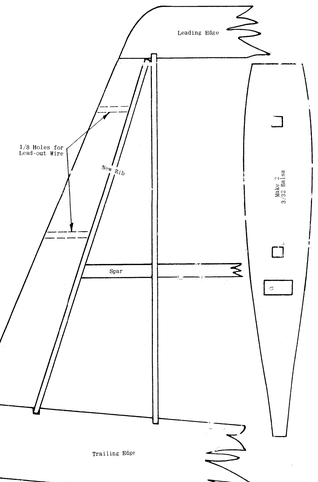

WING TIP #6

Wing tip shown is for clipped wing models for speed and aerobatic models. Remove tip rib #10 from Ringmaster wing. Make 2 ribs from 3/32 sheet using rib pattern shown. Cement rear of rib into trailing edge notch normally used for rib 8, and front to leading edge against rib 7. Trim spar flush with rib. Cut tip filler block from ⅛" sheet and cement to rib between leading and trailing edge. Sand to shape shown and round off smooth. Drill 1/8 holes for lead-out cables in left wing tip only.

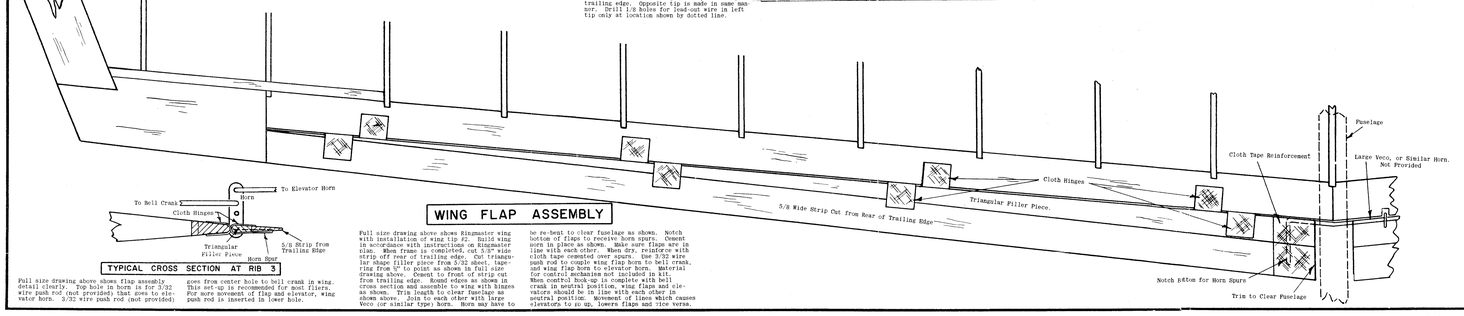

TYPICAL CROSS SECTION AT RIB 3

Full size drawing above shows flap assembly detail clearly. Top hole in horn is for 3/32 wire push rod (not provided) that goes to elevator horn. 3/32 wire push rod (not provided) goes from center hole to bell crank in wing. This set-up is recommended for most fliers. For more movement of flap and elevator, wing push rod is inserted in lower hole.

WING FLAP ASSEMBLY

Full size drawing above shows Ringmaster wing with installation of wing tip #2. Build wing in accordance with instructions on Ringmaster plan. When frame is completed, cut 5/8" wide strip off rear of trailing edge. Cut triangular shape filler piece from 3/32 sheet, tapered to 1/8 thick to fill space left by strip. Use drawing above as pattern to round to front of strip cut from trailing edge. Round edges as shown in cross section and assemble to wing with hinges as shown. Trim length to clear fuselage as shown above. Join to each other with large Veco (or similar type) horn. Horn may have to be bent to clear fuselage as shown. Notch bottom of flaps to receive horn spars. Cement horn in place as shown. Make sure flaps are in line with each other. When dry, reinforce with cloth tape cemented over spars. Use 3/32 wire push rod to couple wing flap horn to bell crank, and 3/32 wire push rod to elevator horn. Material for control mechanism not included in kit. When control hook-up is complete with bell crank in neutral position, wing flaps and elevators should be in line with each other in neutral position. Movement of lines which causes elevators to go up, lowers flaps and vice versa.

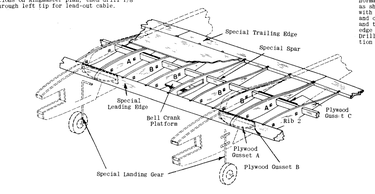

WING CENTER SECTION FOR TWIN
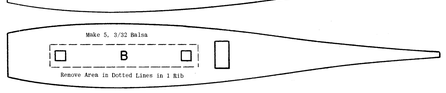
To build center section, it will be necessary to purchase material pack as described and priced in Twin Engine Ringmaster description. Using full size rib patterns shown, cut 4 A & B ribs from 3/32 x 3 x 18 balsa. Cut out slot shown in rib for spar. Add rib #9 and 10 from regular Ringmaster wing in halves. Do not assemble leading edge and spar together since wing halves are joined to center section after it is built. Cement one rib A to each wing half at center section. They take the place of regular rib #1. Notch trailing edge for ribs. Assemble center section in same manner as wing, using special leading and trailing edges and spar and new ribs. Install bell crank platform in same manner as regular Ringmaster. Join wing panels to center section using plywood gussets A, B & C and allow to dry thoroughly. Install controls and finish wing in accordance with instructions. Build center section with 1/16 x 3 x 18 balsa, which extends to rib 2 on both wing panels. Slot covering for control rod. After preparing fuselage, slide on wing and cement securely in place as described in regular Ringmaster installation, centering fuselage over double ribs at juncture of center section and outer wing panels.