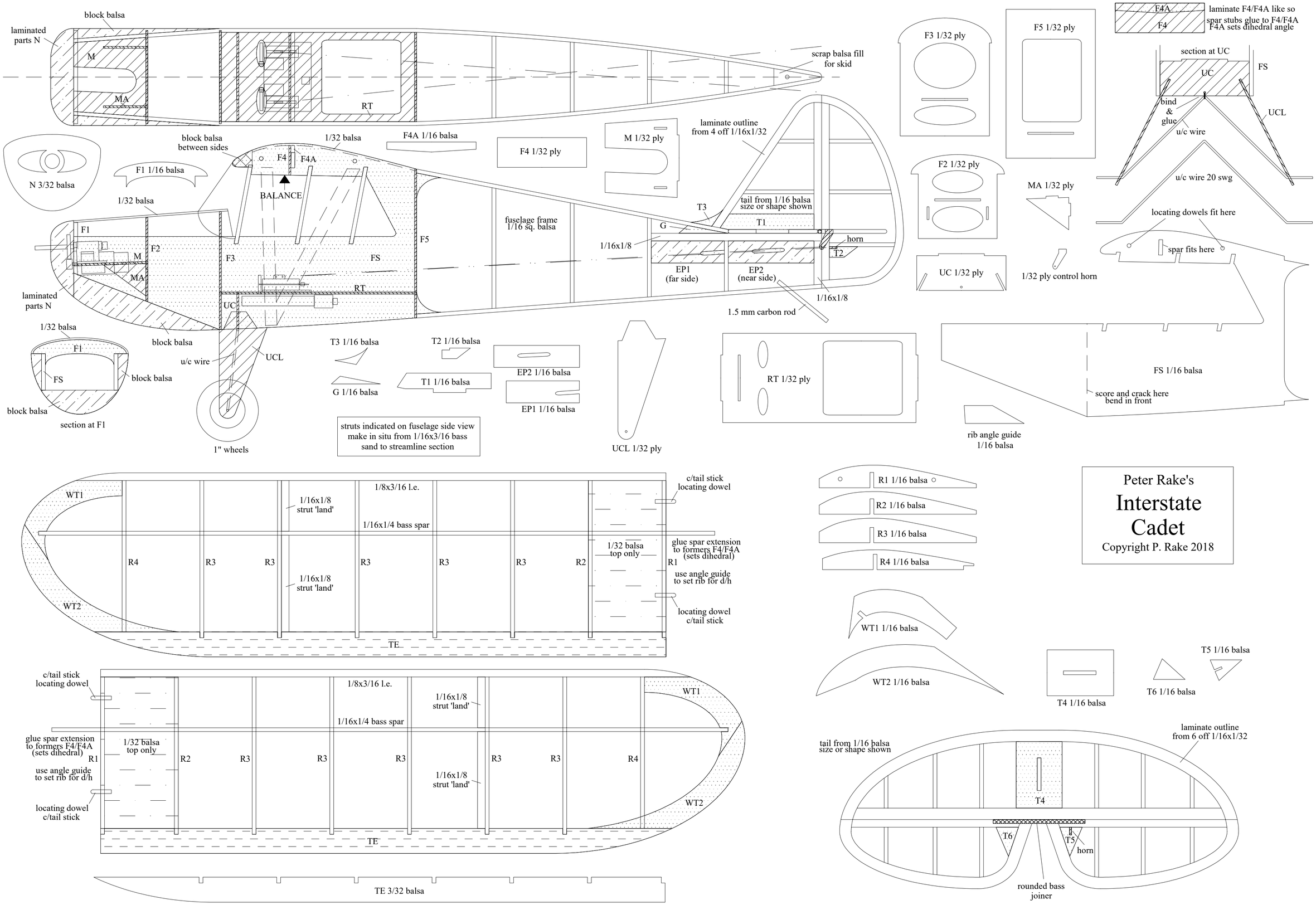
block balsa
laminated parts N
M
MA
RT
scrap balsa fill for skid
F3 1/32 ply
F5 1/32 ply
F4A
F4
laminate F4/F4A like so
spar stubs glue to F4/F4A
F4A sets dihedral angle
section at UC
UC
FS
bind & glue
u/c wire
UCL
N 3/32 balsa
block balsa between sides
1/32 balsa
F4A 1/16 balsa
F4 1/32 ply
M 1/32 ply
laminate outline from 4 off 1/16x1/32
F1 1/16 balsa
BALANCE
F2 1/32 ply
MA 1/32 ply
u/c wire 20 swg
1/32 balsa
F1
F2
F3
F5
fuselage frame 1/16 sq. balsa
T3
tail from 1/16 balsa size or shape shown
T1
G
horn
T2
1/16x1/8
EP1 (far side)
EP2 (near side)
UC 1/32 ply
1/32 ply control horn
locating dowels fit here
spar fits here
laminated parts N
1.5 mm carbon rod
1/16x1/8
1/32 balsa
block balsa
u/c wire
UCL
T3 1/16 balsa
T2 1/16 balsa
EP2 1/16 balsa
G 1/16 balsa
T1 1/16 balsa
EP1 1/16 balsa
RT 1/32 ply
FS 1/16 balsa
score and crack here bend in front
section at F1
1" wheels
struts indicated on fuselage side view make in situ from 1/16x3/16 bass sand to streamline section
UCL 1/32 ply
rib angle guide 1/16 balsa
WT1
WT2
1/8x3/16 l.e.
1/16x1/8 strut 'land'
1/16x1/4 bass spar
c/tail stick locating dowel
1/32 balsa top only
glue spar extension to formers F4/F4A (sets dihedral)
use angle guide to set rib for d/h
R1
R2
R3
R4
TE
R1 1/16 balsa
R2 1/16 balsa
R3 1/16 balsa
R4 1/16 balsa
Peter Rake's
Interstate Cadet
Copyright P. Rake 2018
WT1 1/16 balsa
WT2 1/16 balsa
T4 1/16 balsa
T6 1/16 balsa
T5 1/16 balsa
TE 3/32 balsa
tail from 1/16 balsa size or shape shown
laminate outline from 6 off 1/16x1/32
T4
T6
T5
horn
rounded bass joiner

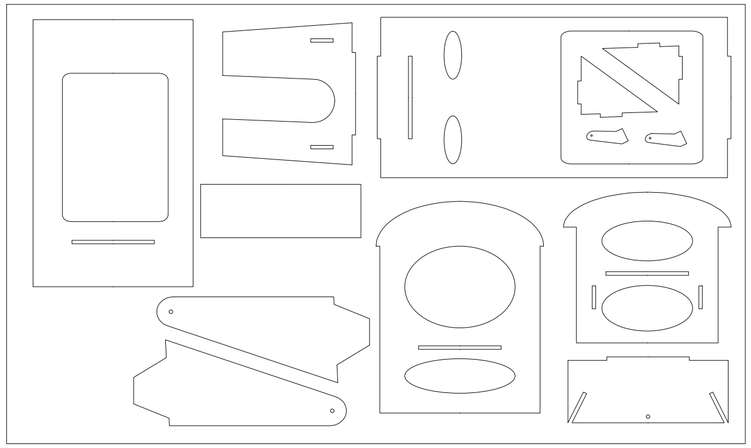

1/32 ply

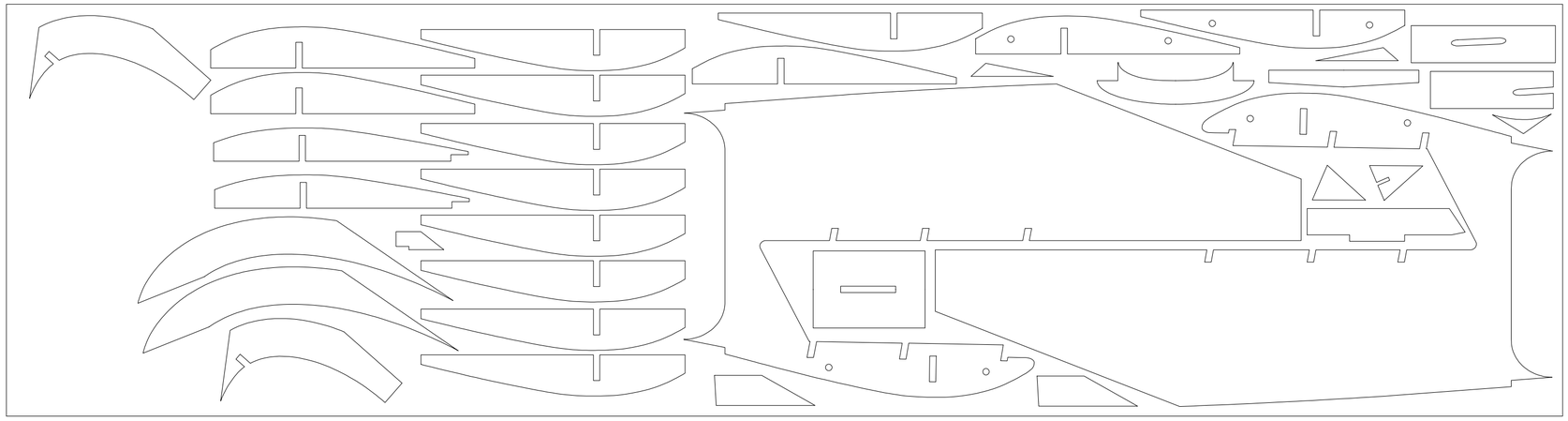

1/16 balsa

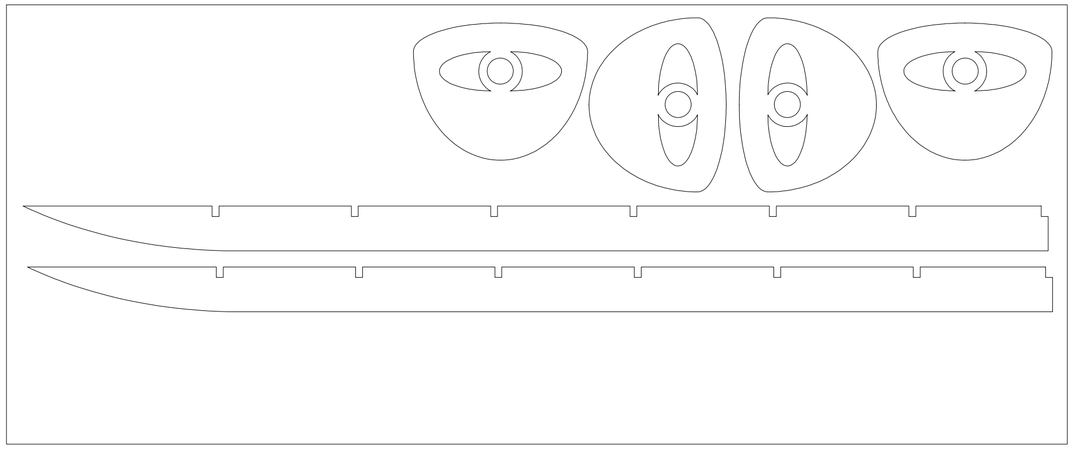

3/32 balsa