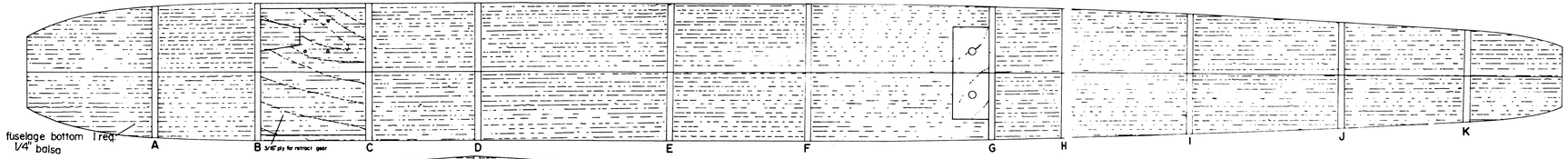

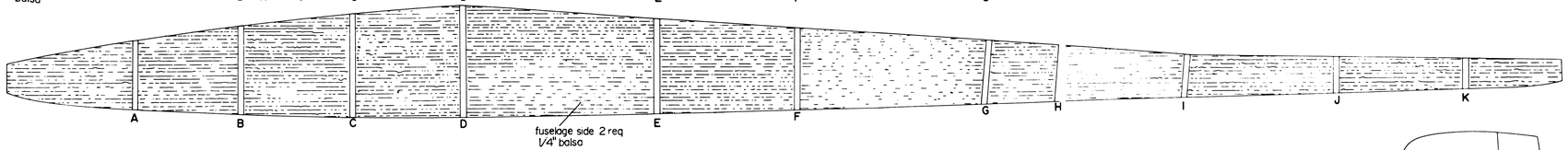

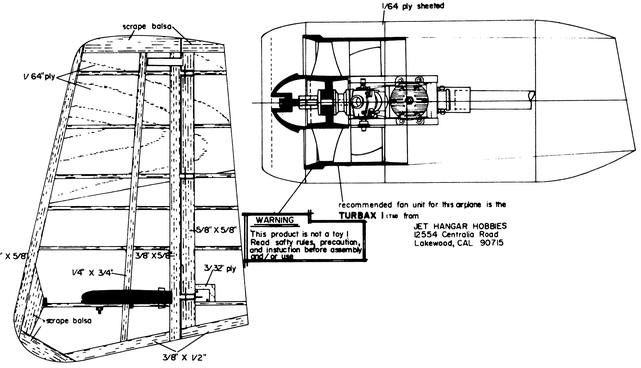

Fairchild Republic A-10A THUNDERBOLT II

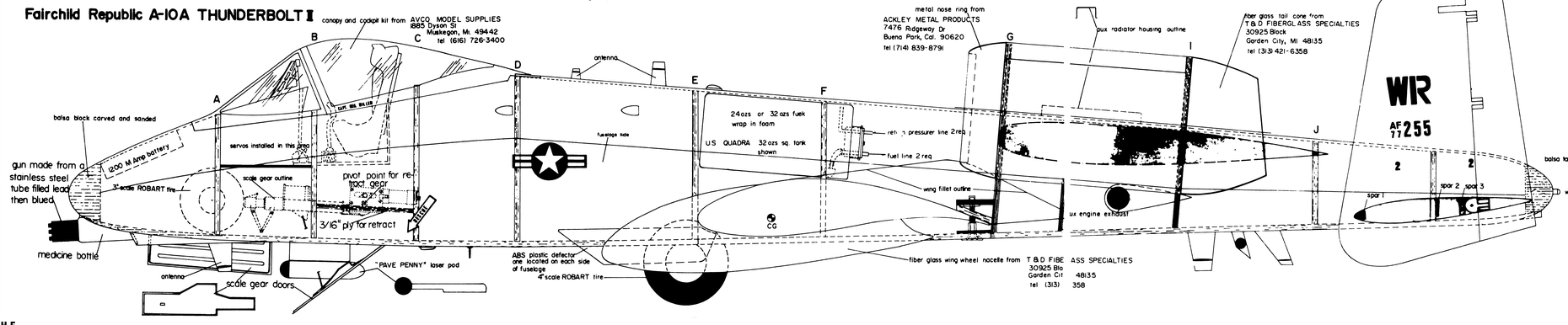

M C Beaulieu's Plan Service
84 UNIVERSITY STREET
PRESQUE ISLE, MAINE 04769

Design, built & flown by GEORGE A MILLER
3825 Douglas Dr
Santa Rosa, Ca. 95404 tel. (707) 523-4838

FAIRCHILD REPUBLIC A-10A THUNDERBOLT II

Date 8/9/005 | Scale Full Size | Sheet No. 1 of 3 | Size 1.36"-1'

ALL RIGHT RESERVED

H.E

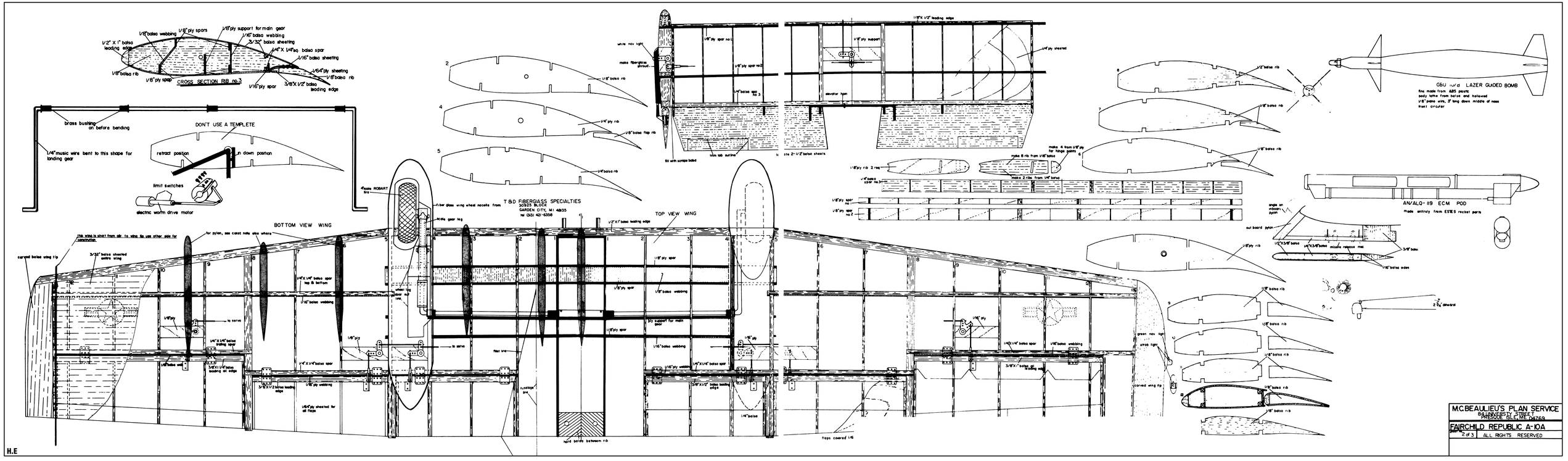
CROSS SECTION RIB no.3
1/2" X 1" balsa leading edge
1/8" balsa webbing
1/8" ply spars
1/8" ply support for main gear
1/16" balsa webbing
3/32" balsa sheeting
1/4" X 1/4" sq. balsa spar
1/16" balsa sheeting
1/64" ply sheeting
1/8" balsa rib
1/8" ply spar
1/16" ply spar
3/8" X 1/2" balsa leading edge
brass bushing on before bending
DON'T USE A TEMPLETE
1/48" music wire bent to this shape for landing gear
retract position
down position
limit switches
electric worm drive motor
BOTTOM VIEW WING
TOP VIEW WING
T & D FIBERGLASS SPECIALTIES
30925 BLOCK
GARDEN CITY, MI 48135
tel (313) 421-6358
fiber glass wing wheel nacelle from
aceles gear leg
4 pcs ROBART hinge
this wing is short from ctr. to wing tip use other side for construction
for pylon, see coast note also where
curved balsa wing tip
3/32" balsa sheeted entire wing
1/4" X 1/4" balsa spar top & bottom
1/16" balsa webbing
1/8" ply
to servo
1/4" X 1/4" balsa trailing spar
1/4" balsa web
3/8" X 1/2" balsa leading edge
1/4" X 1/4" balsa spar
3/8" X 1/2" balsa leading edge
1/8" webbing
1/64" ply sheeted for all flaps
1/8" ply spar
1/8" ply spar
1/8" ply spar
1/8" balsa webbing
ply support for main gear
1/8" ply
1/8" balsa webbing
1/4" X 1/4" balsa spar
1/16" ply webbing
3/8" X 1/2" balsa leading edge
1/4" balsa
fiber sno
fuselage sno
hard balsa between rib
1/8" X 1/2" balsa leading edge
1/8" ply support
1/4" ply sheeted
elevator hpin
sta 2-1/2" balsa sheets
flaps covered 1/16
green nav sgn
strob light
curved wing tip
white nav light
make fiberglass shroud
1/8" ply spar no.1
1/8" ply spar no.2
1/4" balsa spar no.3
1/8" balsa rib
1/4" ply rib
1/8" balsa flap rib
1/4" balsa rib
fill with scraps balsa
trim tab outline
1/8" ply rib 2 req
make 4 from 1/8" ply for hinge gains
make 8 rib from 1/8" balsa
1/4" balsa spar no.3
make 2 ribs from 1/4" balsa
1/8" ply spar no.1
1/8" ply spar no.2
1/2" balsa rib
1/8" balsa rib
G6U 10/d LAZER GUIDED BOMB
fins made from ABS plastic
body tube from balsa and hollowed
1/8" piano wire, 3" long down middle of nose
front circular
AN/ALQ-119 ECM POD
made entirely from ESTES rocket parts
single on inboard pylon
out board pylon
1/8" ply rib
1/8" X 3/8" balsa
1/8" X 3/8" balsa missile release mec
3/8" balsa
1/8" balsa sides
2 3/4" dia cord
1/8" balsa rib
1/8" balsa rib
1/8" balsa rib
1/8" balsa rib
1/8" balsa rib
1/8" balsa rib
1/8" balsa rib
H.E
M.C.BEAULIEU'S PLAN SERVICE
84 UNIVERSITY STREET
PRESQUE ISLE ME 04769
FAIRCHILD REPUBLIC A-10A
2 of 3
ALL RIGHTS RESERVED