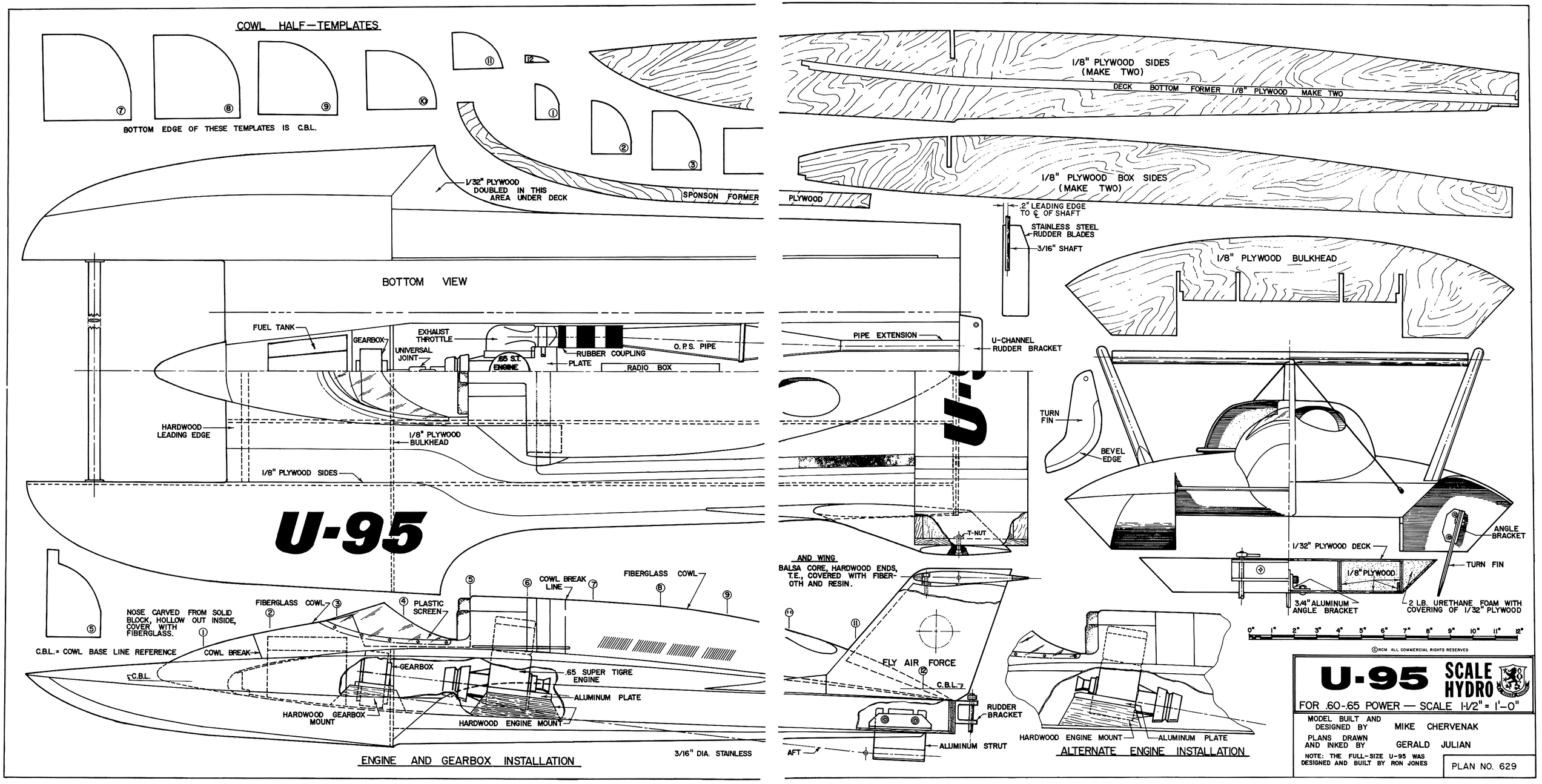
COWL HALF-TEMPLATES
BOTTOM EDGE OF THESE TEMPLATES IS C.B.L.
1/32" PLYWOOD DOUBLED IN THIS AREA UNDER DECK
SPONSON FORMER
BOTTOM VIEW
FUEL TANK
GEARBOX
EXHAUST THROTTLE
UNIVERSAL JOINT
.65 S.T. ENGINE
RUBBER COUPLING
PLATE
O.P.S. PIPE
RADIO BOX
HARDWOOD LEADING EDGE
1/8" PLYWOOD BULKHEAD
1/8" PLYWOOD SIDES
U-95
NOSE CARVED FROM SOLID BLOCK, HOLLOW OUT INSIDE, COVER WITH FIBERGLASS.
FIBERGLASS COWL
PLASTIC SCREEN
COWL BREAK LINE
FIBERGLASS COWL
C.B.L.= COWL BASE LINE REFERENCE
COWL BREAK
C.B.L.
GEARBOX
.65 SUPER TIGRE ENGINE
ALUMINUM PLATE
HARDWOOD GEARBOX MOUNT
HARDWOOD ENGINE MOUNT
3/16" DIA. STAINLESS
ENGINE AND GEARBOX INSTALLATION
1/8" PLYWOOD SIDES (MAKE TWO)
DECK
BOTTOM
FORMER 1/8" PLYWOOD MAKE TWO
1/8" PLYWOOD BOX SIDES (MAKE TWO)
PLYWOOD
.2" LEADING EDGE TO ℄ OF SHAFT
STAINLESS STEEL RUDDER BLADES
3/16" SHAFT
1/8" PLYWOOD BULKHEAD
PIPE EXTENSION
U-CHANNEL RUDDER BRACKET
TURN FIN
BEVEL EDGE
T-NUT
AND WING
BALSA CORE, HARDWOOD ENDS, T.E., COVERED WITH FIBER-OTH AND RESIN.
FLY AIR FORCE
C.B.L.
RUDDER BRACKET
ALUMINUM STRUT
AFT
1/32" PLYWOOD DECK
1/8" PLYWOOD
ANGLE BRACKET
TURN FIN
3/4" ALUMINUM ANGLE BRACKET
2 LB. URETHANE FOAM WITH COVERING OF 1/32" PLYWOOD
0" 1" 2" 3" 4" 5" 6" 7" 8" 9" 10" 11" 12"
HARDWOOD ENGINE MOUNT
ALUMINUM PLATE
ALTERNATE ENGINE INSTALLATION
©RCM ALL COMMERCIAL RIGHTS RESERVED
U-95 SCALE HYDRO
FOR .60-.65 POWER — SCALE 1-1/2" = 1'-0"
MODEL BUILT AND DESIGNED BY MIKE CHERVENAK
PLANS DRAWN AND INKED BY GERALD JULIAN
NOTE: THE FULL-SIZE U-95 WAS DESIGNED AND BUILT BY RON JONES
PLAN NO. 629