PROP - 8" TO 9" PLASTIC PECK POLYMER
MOTOR - 3 LOOPS 1/8" x 36" BRAIDED
COLOR SCHEME - DARK GREEN, DARK SEA GRAY
UPPER SURFACES & TRAINER YELLOW
UNDER - CIRCLE 'P' SPINNER & PROP ARE MATT BLACK
YEL - YELLOW DSG - DARK SEA GRAY
DG - DARK GREEN

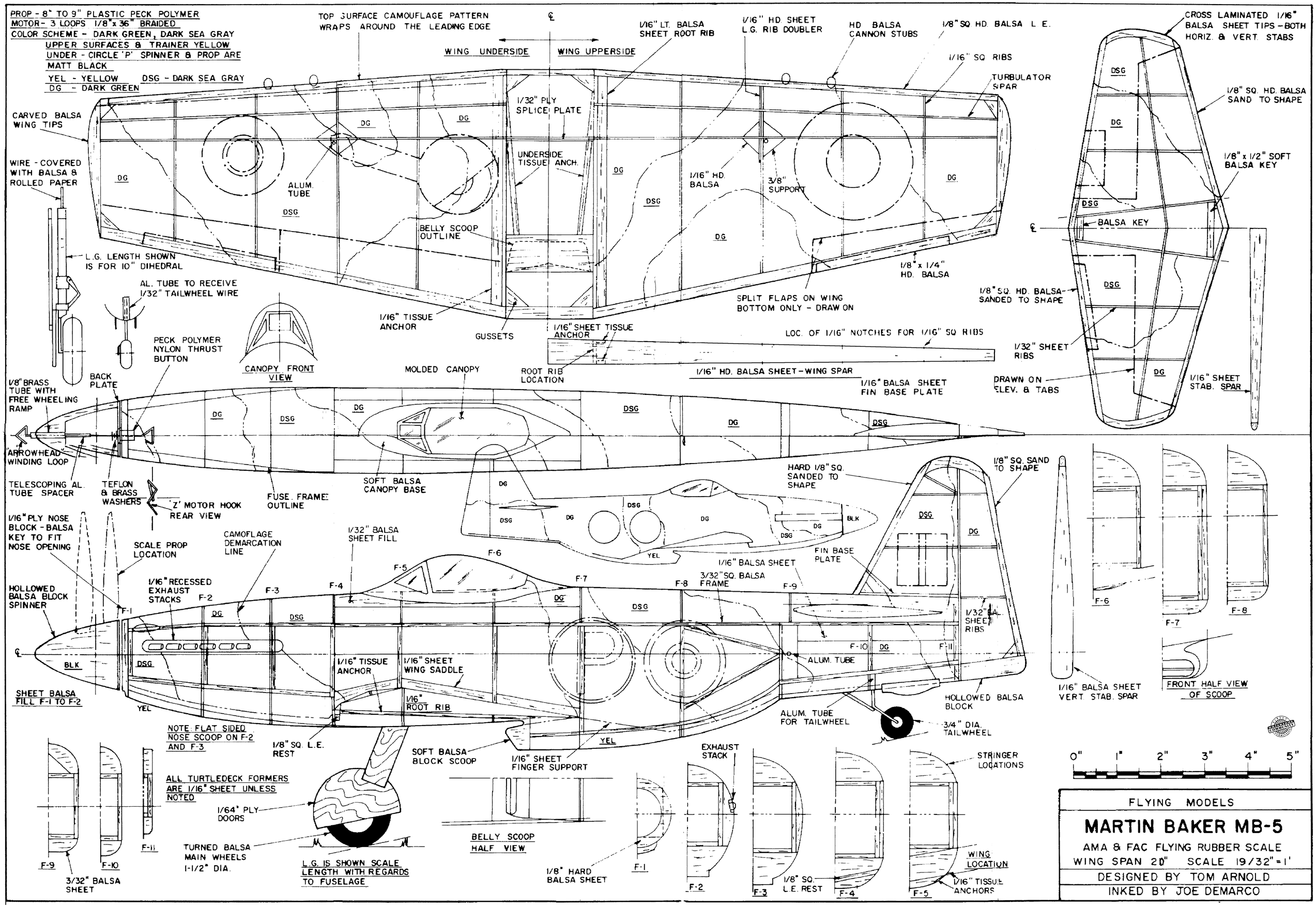

FLYING MODELS

MARTIN BAKER MB-5

AMA & FAC FLYING RUBBER SCALE
WING SPAN 20" SCALE 19/32" = 1'

DESIGNED BY TOM ARNOLD
INKED BY JOE DEMARCO