STINSON RELIANT SR-9

FUSELAGE PLAN No. STNSP02A

NOTE:
ENGINE INSTALLATION SHOWN FOR REFERENCE ONLY.
(PARTS AND HARDWARE NOT INCLUDED)

FUSELAGE

THIS IS A VIEW OF THE TOP OF THE FUSELAGE
SHOWN WITH SIDE STRINGERS AND SHEETING REMOVED FOR CLARITY
THE FUSELAGE BOTTOM IS BUILT UP-SIDE DOWN OVER THIS PLAN

NOTE
TO IMPROVE THE CLARITY OF THIS PLAN, THE MAJORITY OF THE PARTS ON THE BOTTOM OF THE FUSELAGE ARE NOT SHOWN ON THIS VIEW

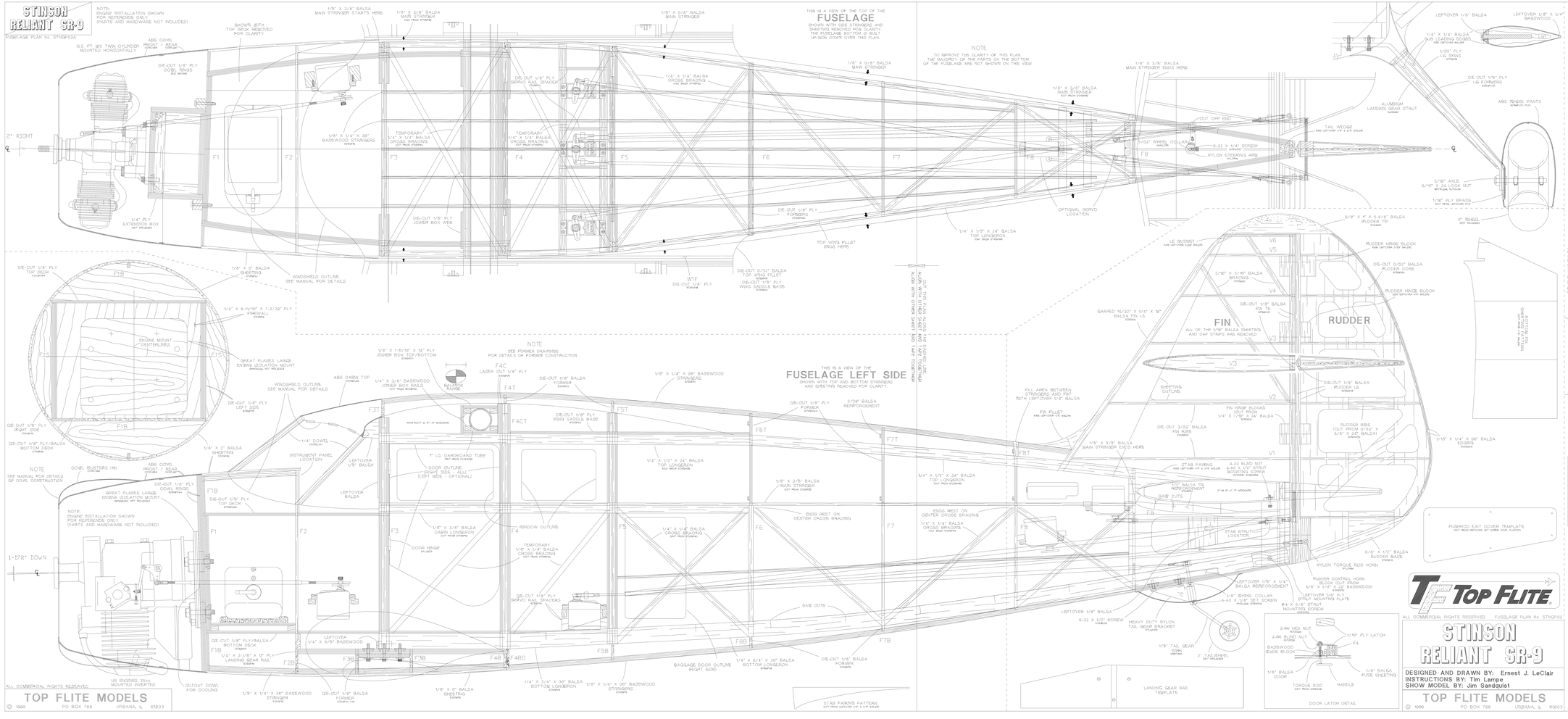
SHOWN WITH TOP DECK REMOVED FOR CLARITY
O.S. FT MID TWIN CYLINDER MOUNTED HORIZONTALLY
ABS COWL FRONT / REAR STRINGER
DIE-CUT 1/8" PLY COWL RINGS
1/8" X 3/8" BALSA MAIN STRINGER STARTS HERE
1/8" X 3/8" BALSA MAIN STRINGER
1/8" X 5/8" BALSA MAIN STRINGER
1/8" X 3/8" BALSA MAIN STRINGER
1/8" X 3/8" BALSA MAIN STRINGER ENDS HERE
1/8" X 3/8" BALSA MAIN STRINGER
1/8" X 1/4" BALSA BASWOOD STRINGERS
TEMPORARY 1/4" X 1/4" BALSA CROSS BRACING
DIE-CUT 1/8" PLY SERVO RAIL SPACERS
1/4" X 1/4" BALSA CROSS BRACING
DIE-CUT 1/8" PLY JOINER BOX WEB
DIE-CUT 1/8" PLY FORMERS
1/4" PLY EXTENSION BOX
TOP WING FILLET ENDS HERE
1/4" X 1/2" X 24" BALSA TOP LONGERON
OPTIONAL SERVO LOCATION
OUT OFF END
TAIL WEDGE
1/32" WHEEL COLLAR
6-32 X 1/4" SCREW
NYLON STEERING ARM
3/16" AXLE
6/40 X 3/4 LOCK NUT
1/16" PLY BRACE
5" WHEEL
ALUMINUM LANDING GEAR STRUT
ABS WHEEL PANTS
LEFTOVER 1/8" BALSA
LEFTOVER 1/8" X 1/4" BASSWOOD
1/4" X 1/4" BALSA RUB LEADING EDGES
1/32" PLY LG SIDING
DIE-CUT 1/8" PLY LG FORMERS
2" RIGHT
DIE-CUT 1/8" PLY TOP DECK
1/8" X 3" BALSA SHEETING
WINDSHIELD OUTLINE SEE MANUAL FOR DETAILS
1/4" X 5-11/16" X 7-3/32" PLY FIREWALL
ENGINE MOUNT CENTERLINES
GREAT PLANES LARGE ENGINE ISOLATION MOUNT
DIE-CUT 1/8" PLY LEFT SIDE
DIE-CUT 1/8" PLY RIGHT SIDE
DIE-CUT 1/8" PLY/BALSA BOTTOM DECK
NOTE
SEE MANUAL FOR DETAILS OF COWL CONSTRUCTION
COWL BLISTERS (16)
ABS COWL FRONT / REAR STRINGER
DIE-CUT 1/8" PLY COWL RINGS
NOTE:
ENGINE INSTALLATION SHOWN FOR REFERENCE ONLY.
(PARTS AND HARDWARE NOT INCLUDED)
1-1/2" DOWN
DIE-CUT 1/8" PLY/BALSA BOTTOM DECK
1/4" X 2-1/8" X 12" PLY LANDING GEAR RAIL
LEFTOVER 1/4" X 1/8" BASWOOD
US ENGINES 3500 MOUNTED INVERTED
OUTPUT COWL FOR COOLING
1/8" X 1/4" X 36" BASWOOD STRINGER
DIE-CUT 1/8" BALSA FORMER
1/8" X 3" BALSA SHEETING
1/4" X 3/4" X 36" BALSA BOTTOM LONGERON
1/8" X 1/4" X 36" BASWOOD STRINGERS
ABS CABIN TOP
1/4" X 3/8" BASWOOD JOINER BOX RAILS
BALANCE RANGE
DIE-CUT 1/8" BALSA FORMER
1/8" X 1/4" X 36" BASWOOD STRINGERS
SEE FORMER DRAWINGS FOR DETAILS OF FORMER CONSTRUCTION
LASER CUT 1/8" PLY
DIE-CUT 1/8" PLY WING SADDLE BASE
DIE-CUT 1/8" PLY FORMER
3/32" BALSA REINFORCEMENT
1/8" X 3/8" BALSA MAIN STRINGER
1/4" X 1/2" X 24" BALSA TOP LONGERON
1/4" X 1/4" BALSA CROSS BRACING
ENDS REST ON CENTER CROSS BRACING
1/4" X 3/4" X 36" BALSA BOTTOM LONGERON
DIE-CUT 1/8" BALSA FORMER
STAB FAIRING PATTERN
BAGGAGE DOOR OUTLINE (RIGHT SIDE)
WINDOW OUTLINE
DOOR HINGE
DOOR OUTLINE (RIGHT SIDE - ALL LEFT SIDE - OPTIONAL)
LEFTOVER 1/8" BALSA
INSTRUMENT PANEL LOCATION
1/4" DOWEL
1/8" X 3/8" BALSA OABN LONGERON
TEMPORARY 1/4" X 1/4" BALSA CROSS BRACING
SAW CUTS
ALIGN WITH OTHER SHEET AND TAPE TOGETHER
THIS IS A VIEW OF THE FUSELAGE LEFT SIDE
SHOWN WITH TOP AND BOTTOM STRINGERS AND SHEETING REMOVED FOR CLARITY
1/8" X 1/4" X 36" BASWOOD STRINGERS
1/8" X 1/4" X 36" BASWOOD STRINGERS
FILL AREA BETWEEN STRINGERS AND FST WITH LEFTOVER 1/4" BALSA
FIN FILLET
1/8" X 3/8" BALSA MAIN STRINGER ENDS HERE
FIN
ALL OF THE 1/16" BALSA SHEETING AND CAP STRIPS ARE REMOVED
RUDDER
SHEETING OUTLINE
FIN HINGE BLOCKS (CUT FROM 1/4" X 1/2" X 24" BALSA)
DIE-CUT 3/32" BALSA FIN RIBS
DIE-CUT 1/8" BALSA FIN TE
DIE-CUT 1/8" BALSA RUDDER LE
DIE-CUT 3/32" BALSA RUDDER CORE
RUDDER HINGE BLOCK
RUDDER HINGE BLOCK
RUDDER RIBS (CUT FROM 3/32" X 5/8" X 24" BALSA)
1/16" X 1/4" X 36" BALSA SIDING
1/8" X 1/4" X 36" BASWOOD STRINGERS
STAB FAIRING
6-40 BLIND NUT
6-40 X 1/2" STRUT MOUNTING SCREW
1/32" BALSA TRI MOUNT REINFORCEMENT
SAW CUTS
STAB STRUT LOCATION
NYLON TORQUE ROD HORN
LEFTOVER 1/8" X 1/4" BALSA REINFORCEMENT
RUDDER CONTROL HORN BLOCK (CUT FROM 6/8" X 5/8" X 32" BASSWOOD)
LEFTOVER 1/8" X 1/4" STRUT MOUNTING PLATE
8-4 X 5/8" STRUT MOUNTING SCREW
1/8" WHEEL COLLAR
6-40 X 1/8" SET SCREW
LEFTOVER 1/8" BALSA
6-32 X 1/4" SCREW
HEAVY DUTY NYLON TAIL GEAR BRACKET
1/8" TAIL GEAR WIRE
2" TAILWHEEL
LANDING GEAR RAIL TEMPLATE
2-56 HEX NUT
2-56 BLIND NUT
BASWOOD GUIDE BLOCK
1/8" BALSA DOOR
TORQUE ROD
HANDLE
1/16" PLY LATCH
F4
1/8" BALSA FUSE SHEETING
DOOR LATCH DETAIL
PUSHROD EXIT COVER TEMPLATE
1/8" X 1/2" BALSA RUDDER BASS
ELEVATOR
HORIZONTAL STAB
ELEVATOR
ORIGIN BRACES (1/4" WIDE) 1/8" X 3/8" BALSA
1/8" X 1/4" X 36" BALSA ELEVATOR SIDING
LEFTOVER 1/4" X 1/4" BALSA
1/16" X 1/2" BALSA
1/8" X 1/4" X 36" BALSA
1/4-40 BLIND NUT
1/16" PLY ELEVATOR SHEETING
1/16" X 1/2" BALSA
1/16" PLY ELEVATOR SHEETING
1/16" X 1/2" BALSA
1/16" X 1/2" BALSA
1/16" X 1/2" BALSA

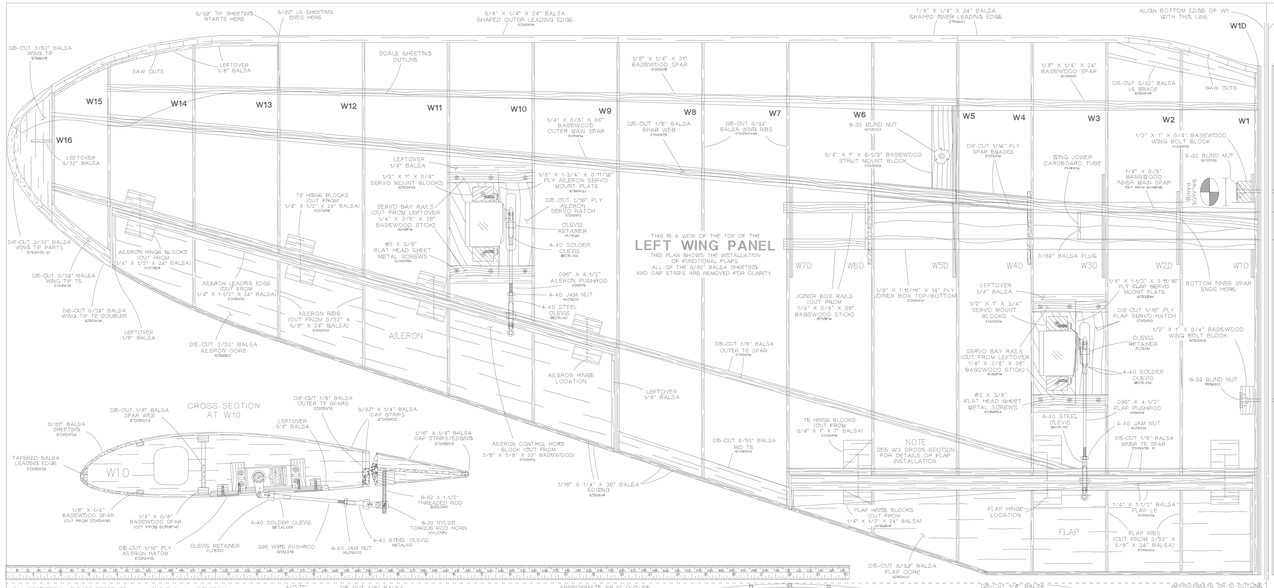

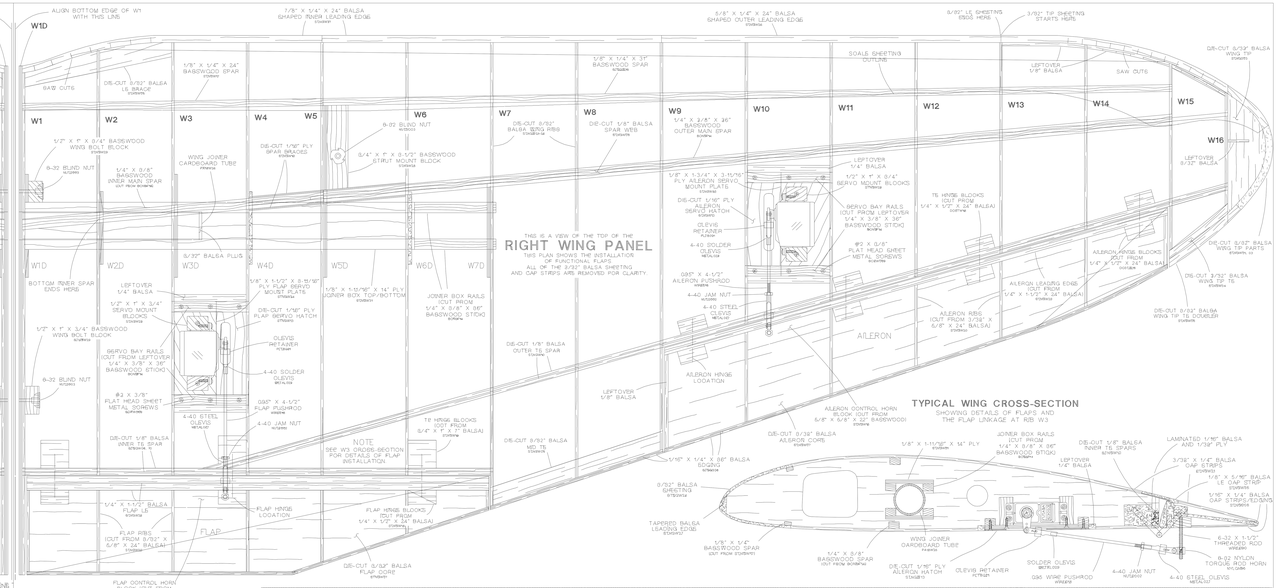

STINSON RELIANT SR-9

TOP FLITE MODELS

© 1996 PO BOX 788 URBANA, IL 61803

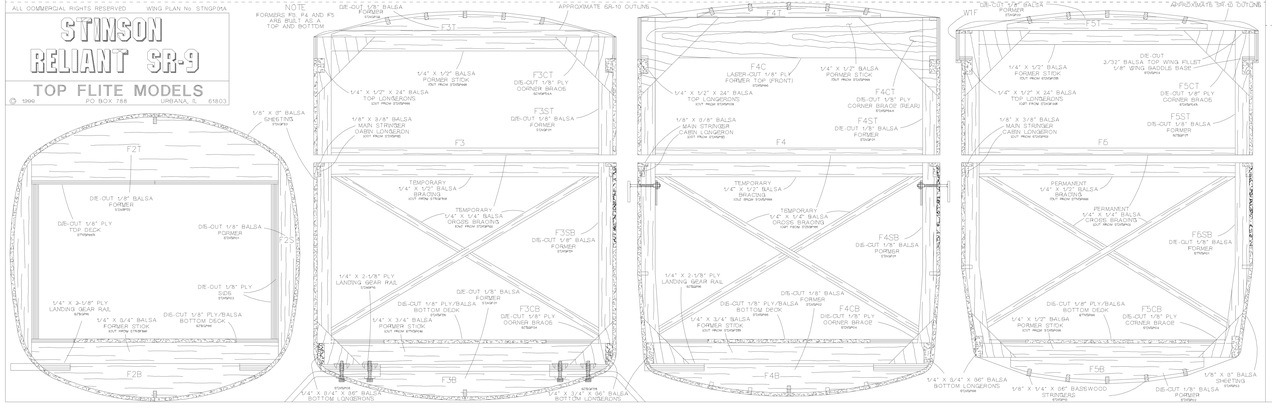

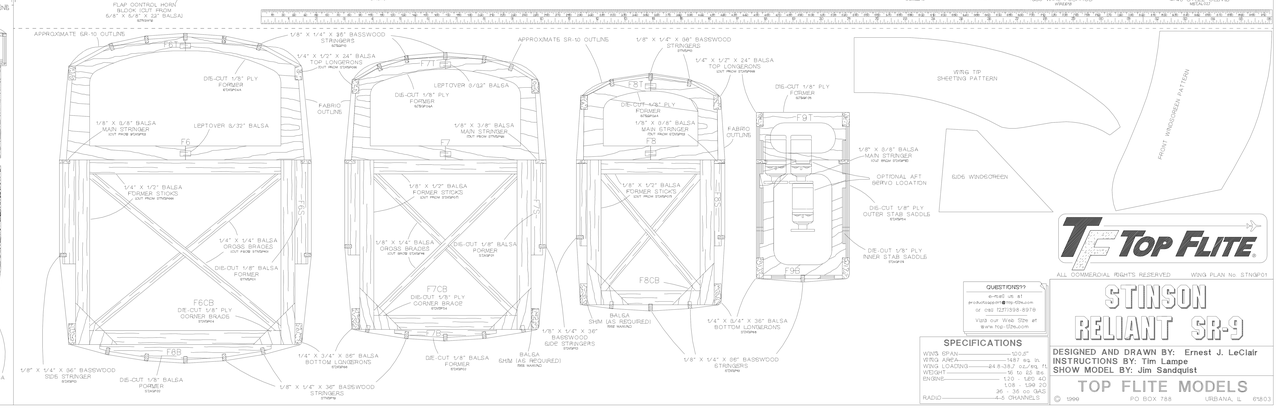

QUESTIONS???
e-mail us at
productsupport@top-flite.com
or call (217)398-8918
visit our Web Site at
www.top-flite.com

SPECIFICATIONS

WING SPAN	120.0"
WING AREA	1487 sq. in.
WING LOADING	24.8-38.7 oz/sq. ft.
WEIGHT	50 60 68 lbs.
ENGINE	.120 - .180 4C
	.108 - .136 2C
	.36 - .38 cu. (2-Stroke)
RADIO	4-5 CHANNELS

STINSON RELIANT SR-9

DESIGNED AND DRAWN BY: Ernest J. LeClair
INSTRUCTIONS BY: Tim Lampe
SHOW MODEL BY: Jim Sandquist

TOP FLITE MODELS

© 1996 PO BOX 788 URBANA, IL 61803

STNGW10 — 4 REQ.

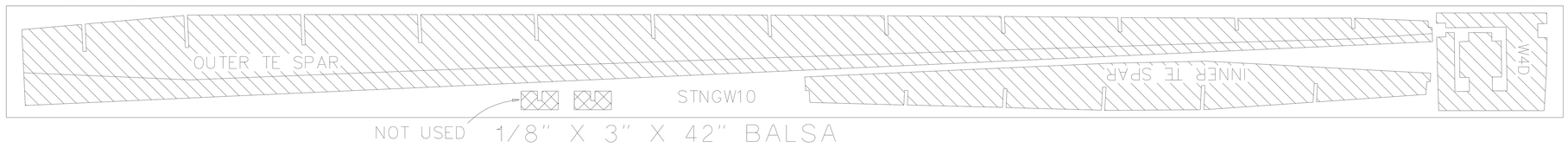

1/8" X 3" X 42" BALSA

STNGS06 — 2 REQ.

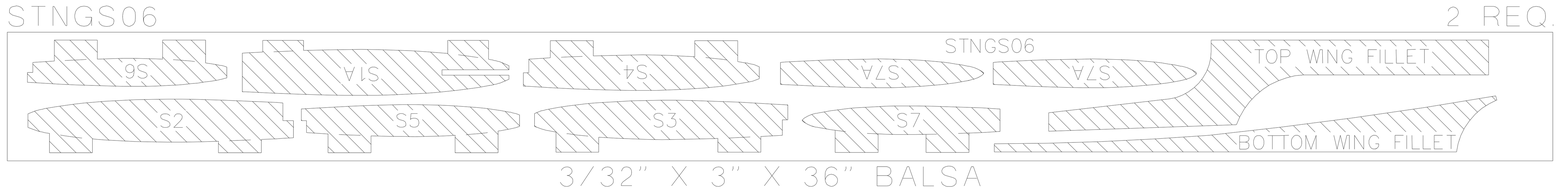

3/32" X 3" X 36" BALSA

STNGS05 — 1 REQ.

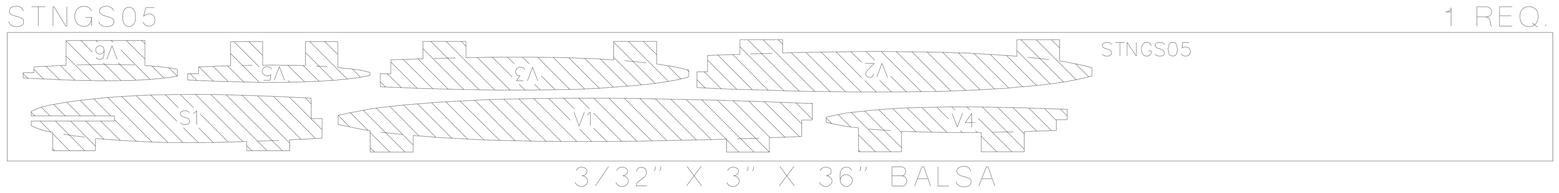

3/32" X 3" X 36" BALSA

STNGS04 — RUDDER CORE PARTS — 1 REQ.

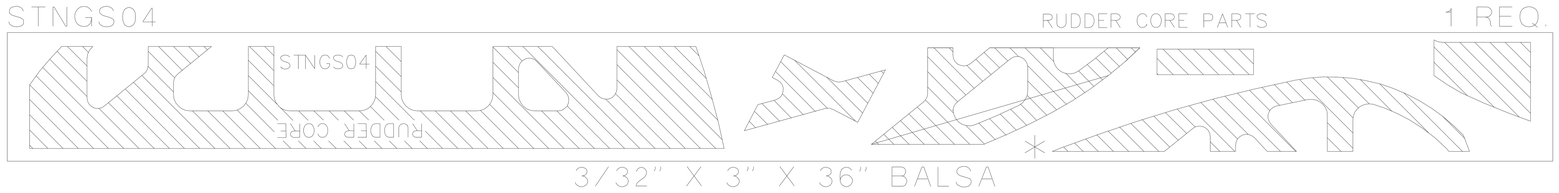

3/32" X 3" X 36" BALSA

STNGS03 — 2 REQ.

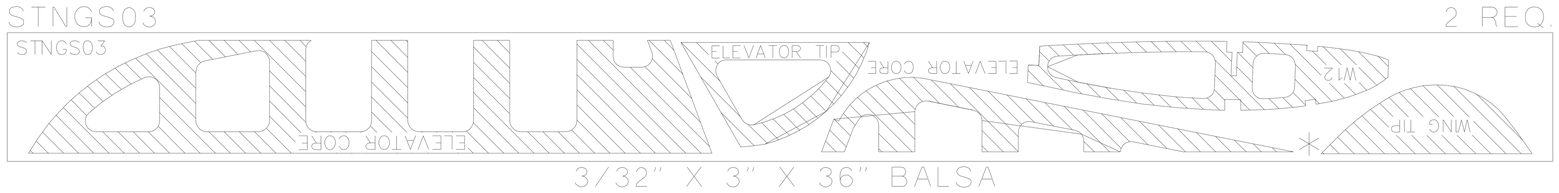

3/32" X 3" X 36" BALSA

STNGS02 — STAB GUSSETS — 2 REQ.

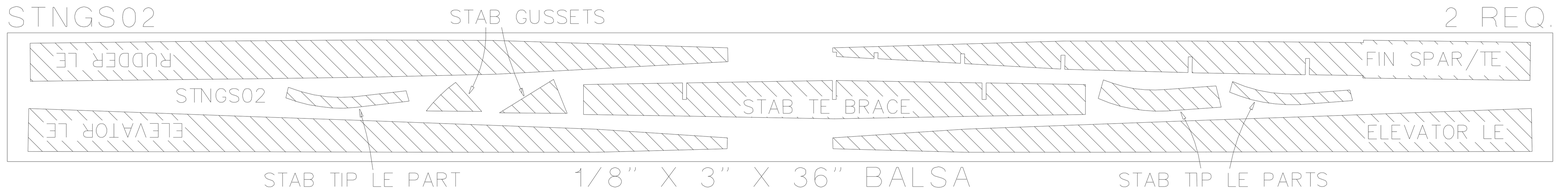

STAB TIP LE PART — 1/8" X 3" X 36" BALSA — STAB TIP LE PARTS

STNGS01 — 1 REQ.

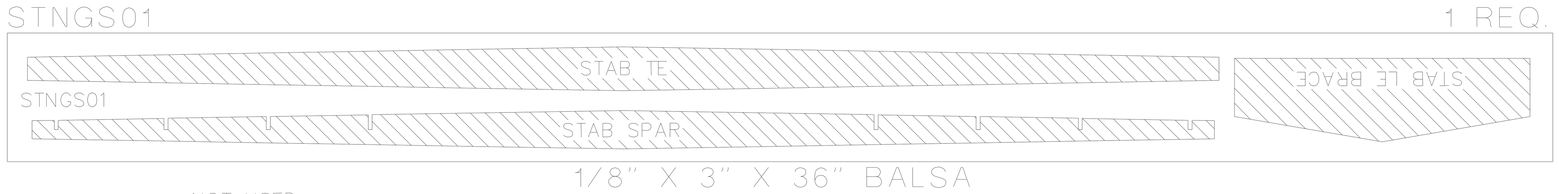

1/8" X 3" X 36" BALSA

STNGW08 — NOT USED — 2 REQ.

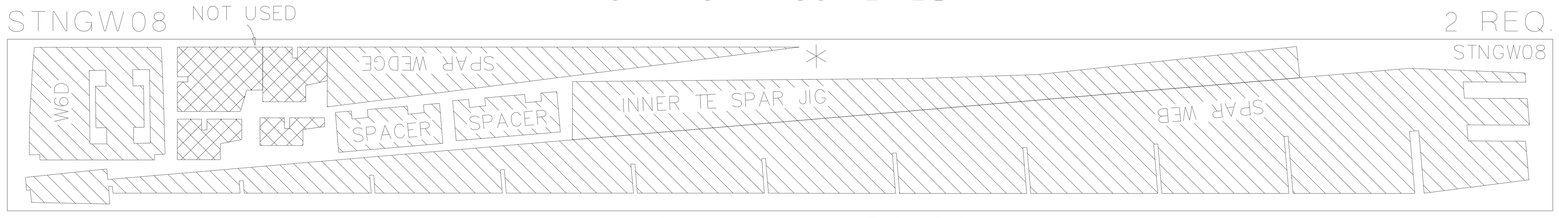

1/8" X 4" X 36" BALSA

STNGW07 — 2 REQ.

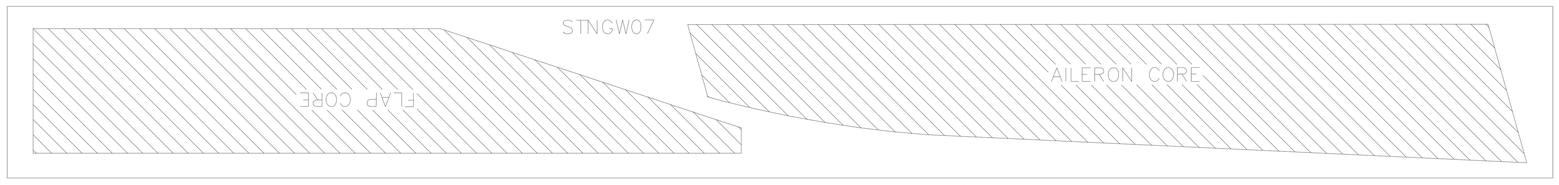

3/32" X 4" X 36" BALSA

STNGW05 — TIP TE DOUBLER (W15–W16) — 2 REQ.

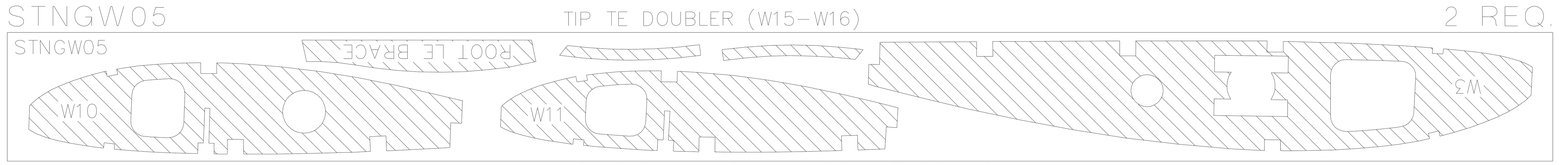

3/32" X 3" X 36" BALSA

STNGW04 — 2 REQ.

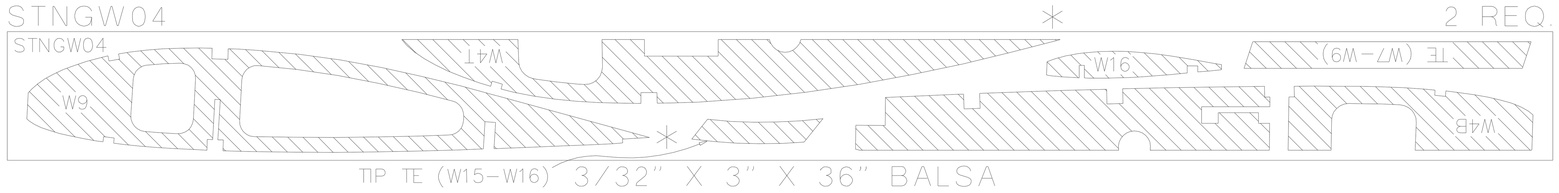

TIP TE (W15–W16) — 3/32" X 3" X 36" BALSA

STNGW03 — 2 REQ.

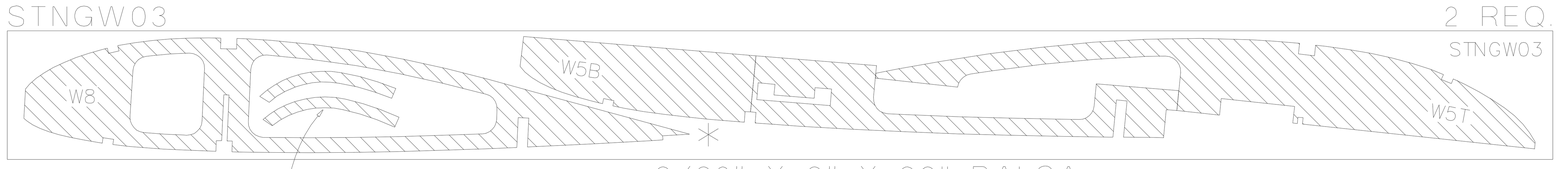

WING TIP PARTS — 3/32" X 3" X 36" BALSA

STNGW02 — 2 REQ.

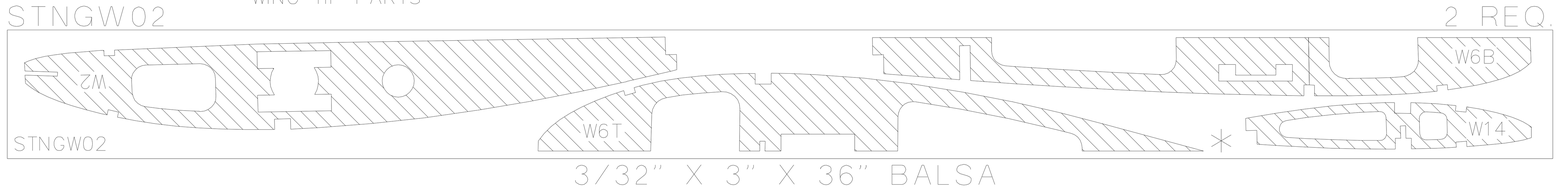

3/32" X 3" X 36" BALSA

STNGW01 — 2 REQ.

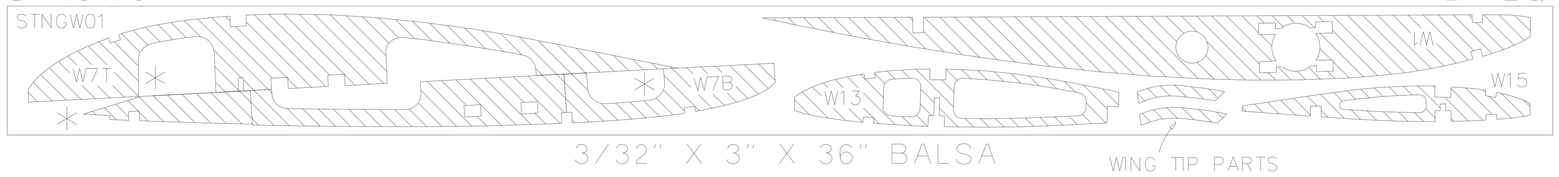

3/32" X 3" X 36" BALSA — WING TIP PARTS

STNGF02 — 1 REQ.

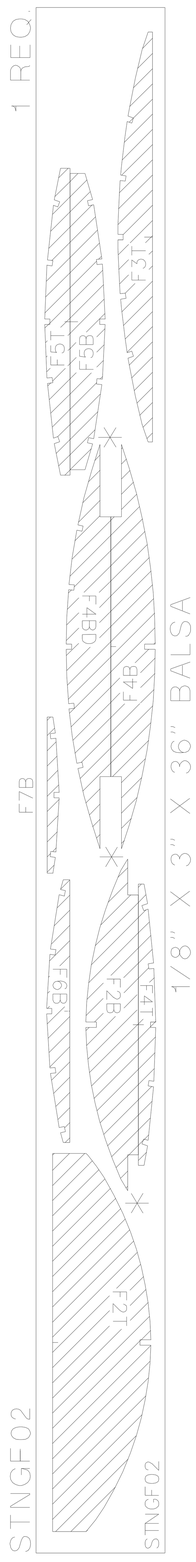

1/8" X 3" X 36" BALSA

STNGF01 — 2 REQ.

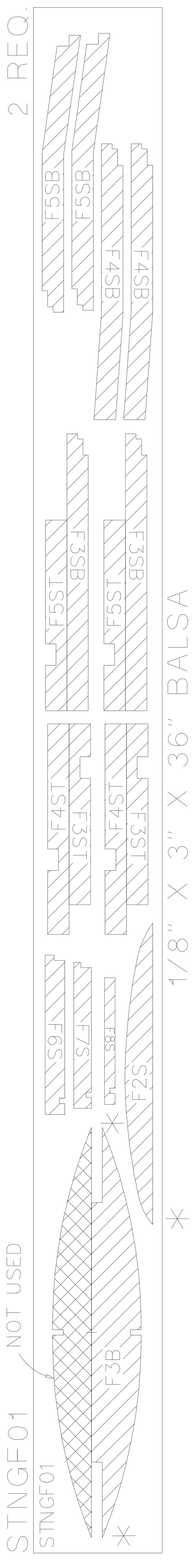

1/8" X 3" X 36" BALSA

1/8" X 3" X 42" BALSA

STNGW12

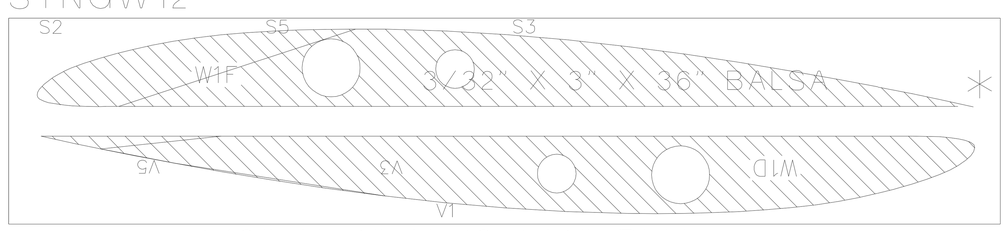

1/8" X 4" X 19-1/4" PLY

STNGF05A

3/32" X 3" X 36" BALSA

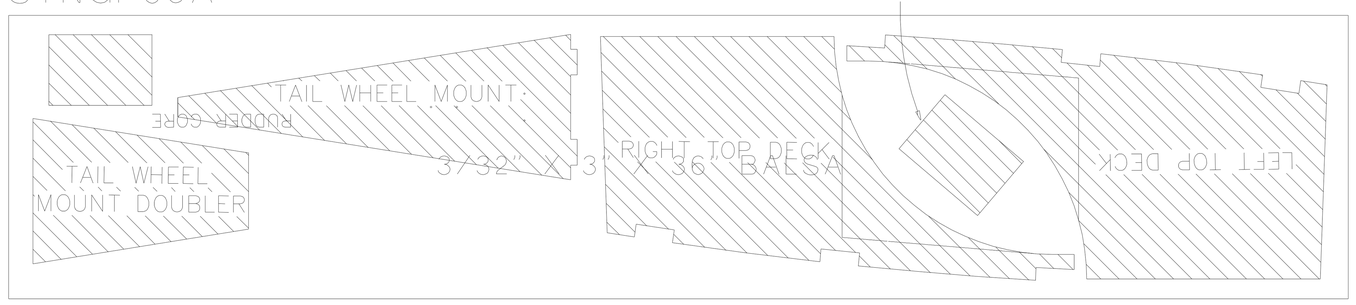

1/8" X 5-1/2" X 26" PLY

STNGF05

3/32" X 3" X 36" BALSA

1 REQ.

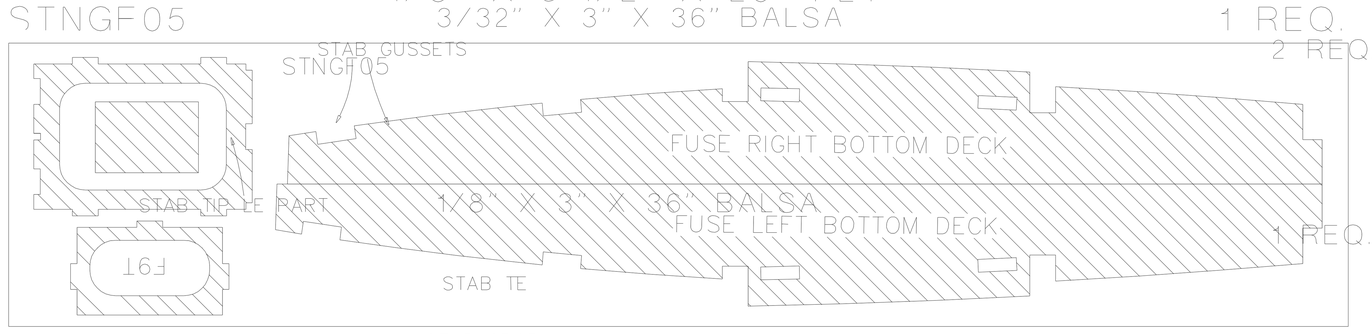

2 REQ.

1 REQ.

1/8" X 5-1/2" X 26" PLY

STNGF04A

3/32" X 3" X 36" BALSA

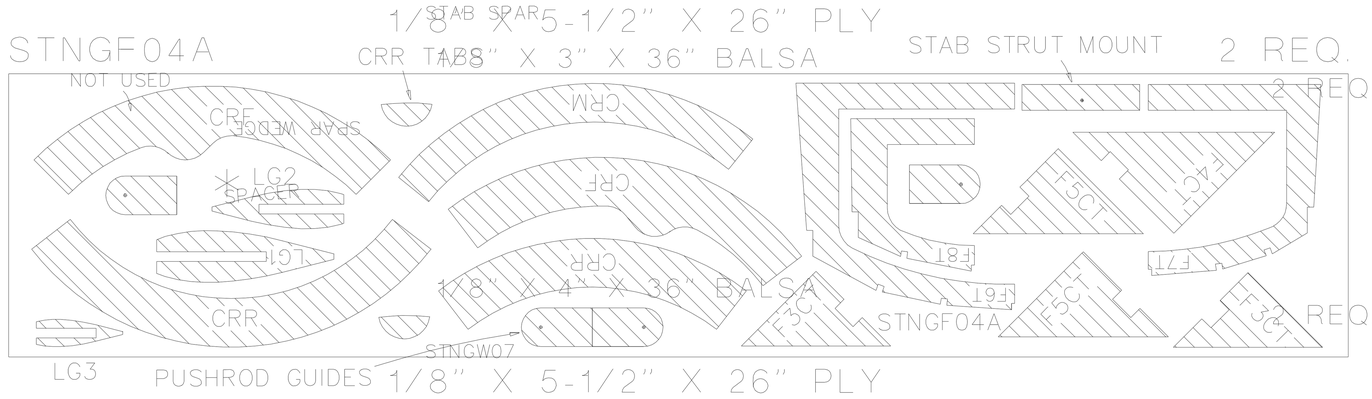

2 REQ.

2 REQ.

1/8" X 4" X 36" BALSA

1/8" X 5-1/2" X 26" PLY

STNGF04

3/32" X 4" X 36" BALSA

SERVO RAIL SPACERS

2 REQ.

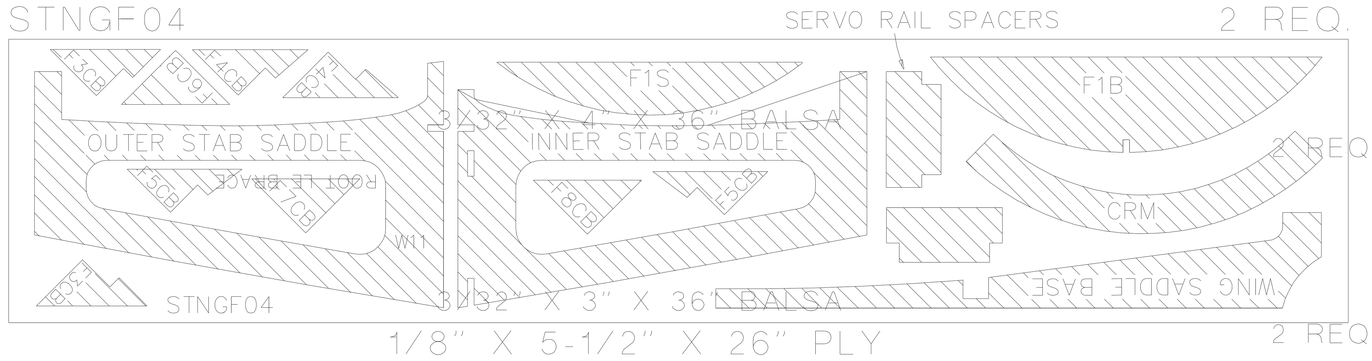

2 REQ.

3/32" X 3" X 36" BALSA

1/8" X 5-1/2" X 26" PLY

STNGF03

2 REQ.

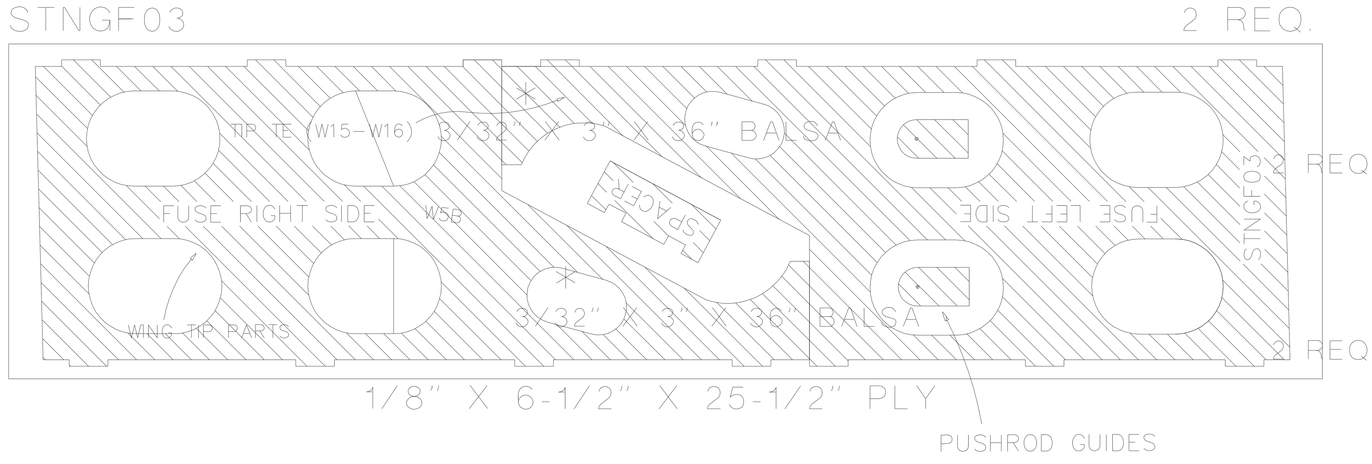

2 REQ.

2 REQ.

1/8" X 6-1/2" X 25-1/2" PLY

PUSHROD GUIDES

3/32" X 3" X 36" BALSA

3/32" X 3" X 36" BALSA

STNGW13

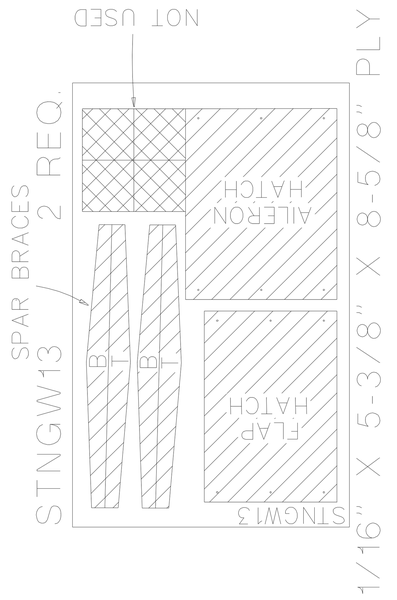

STNGW11

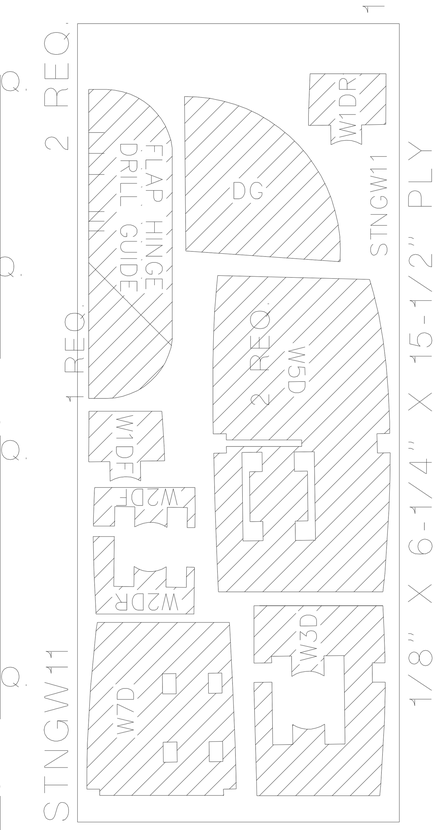
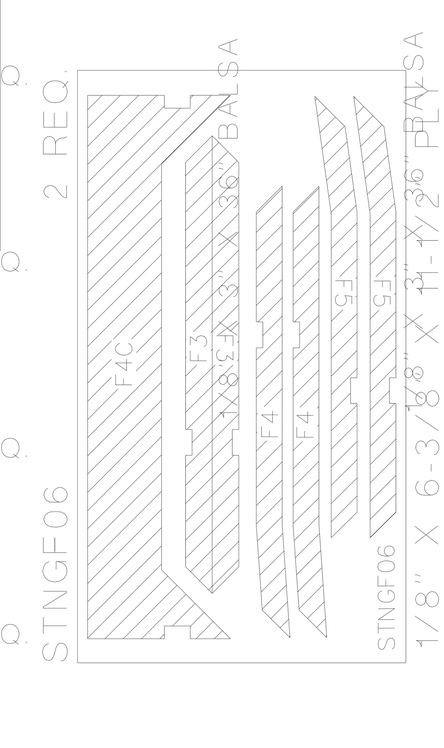
STNGF06