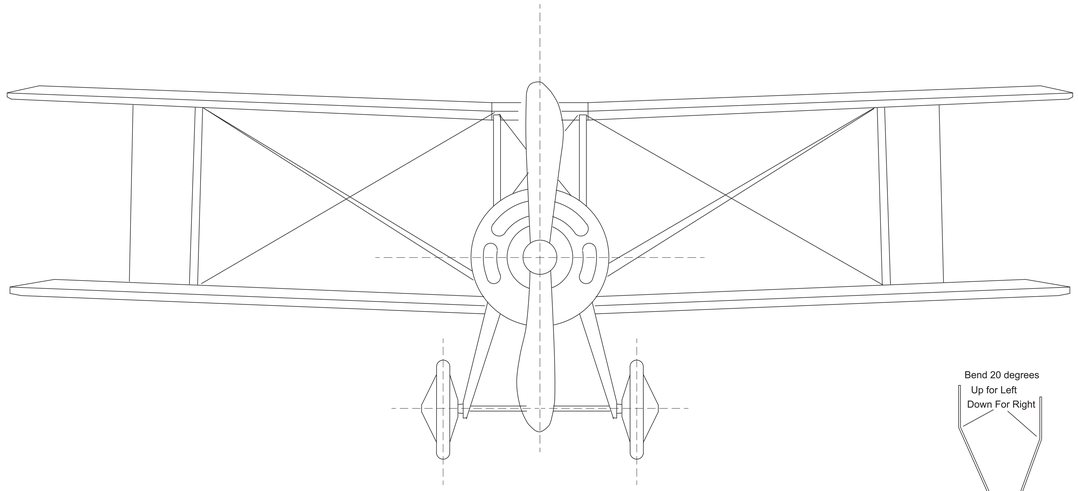

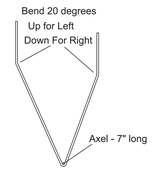

Landing Gear Sides
.055" Wire

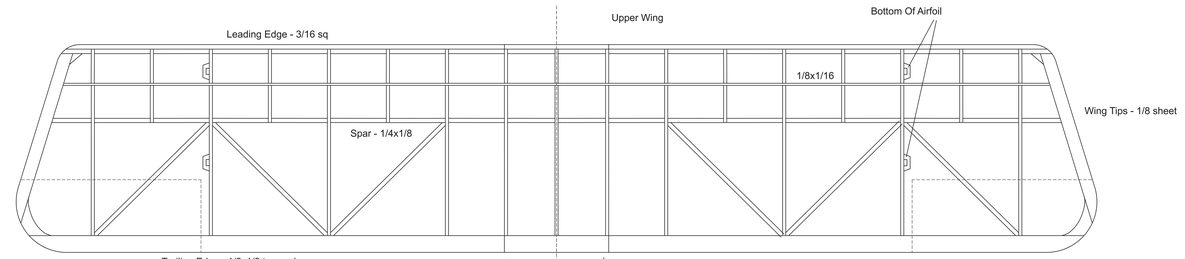

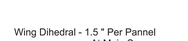

Wing Dihedral - 1.5 " Per Pannel
At Main Spar

Full size ribs Used On Both Wings
19 required

Dihedral Break

Center Section Lower Wing
2 Required - From full size
Tails also used

12 required

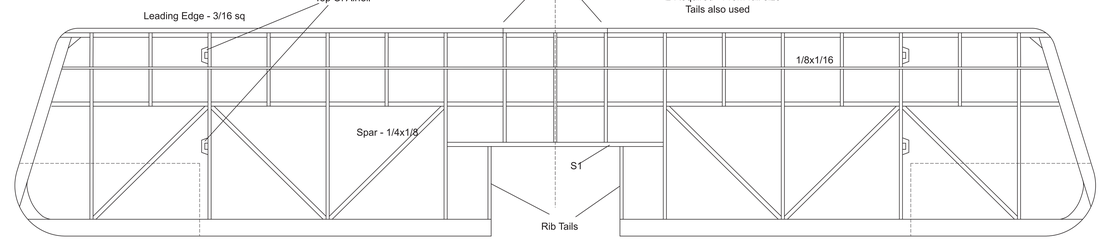

Spar S1 For Lower Wing

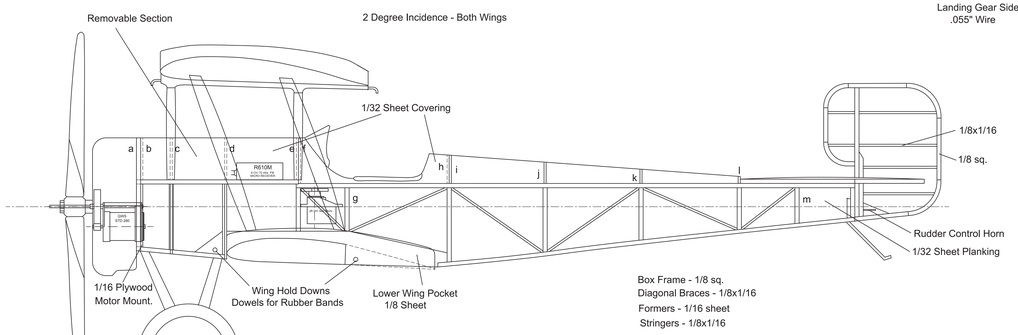

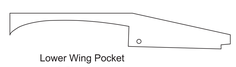

Lower Wing Pocket
1/8 Sheet

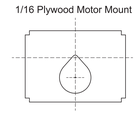

1/16 Plywood Motor Mount

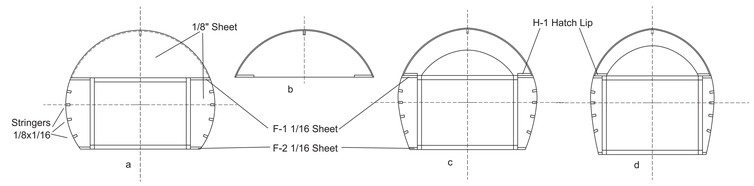

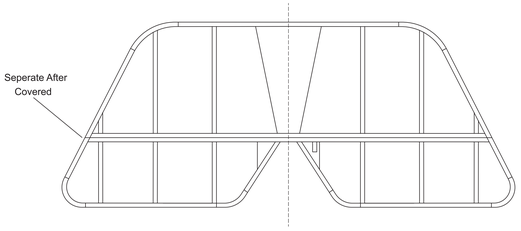

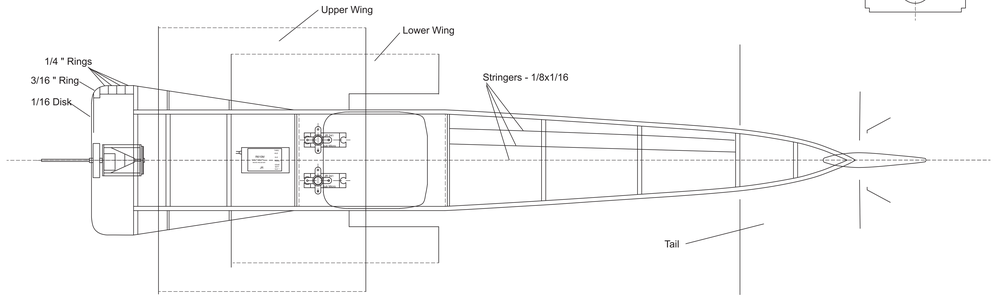

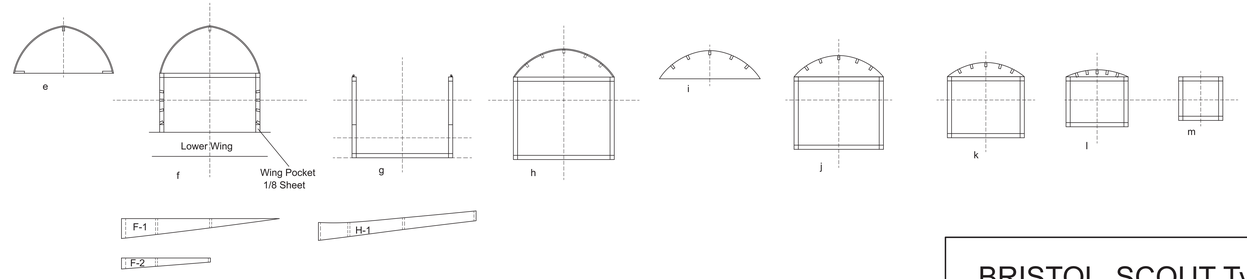

BRISTOL SCOUT Type D

Drawn By

J.C. Wilkerson

7/2001