Fairchild 22
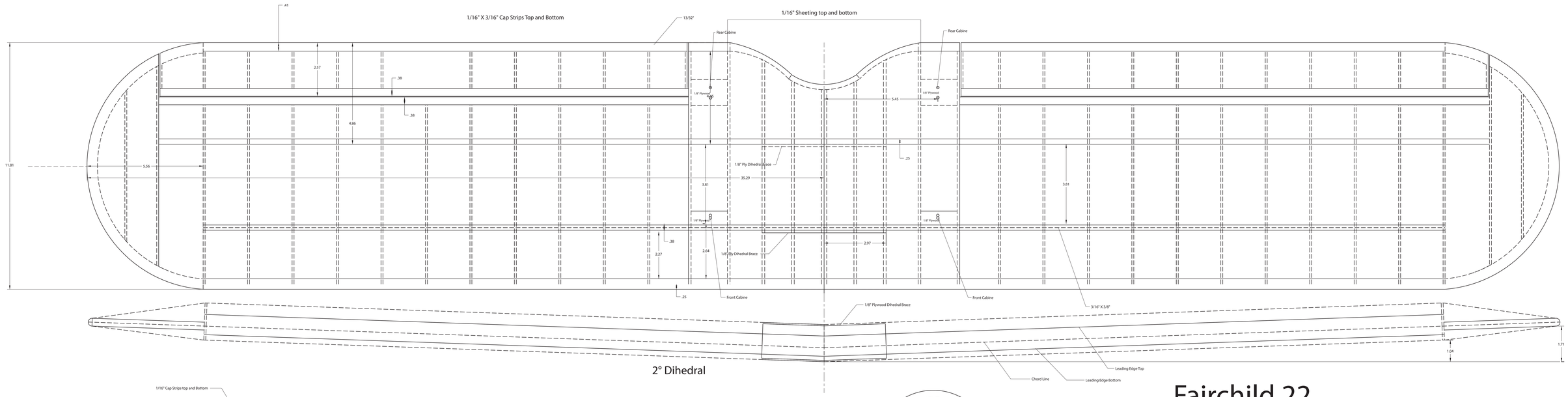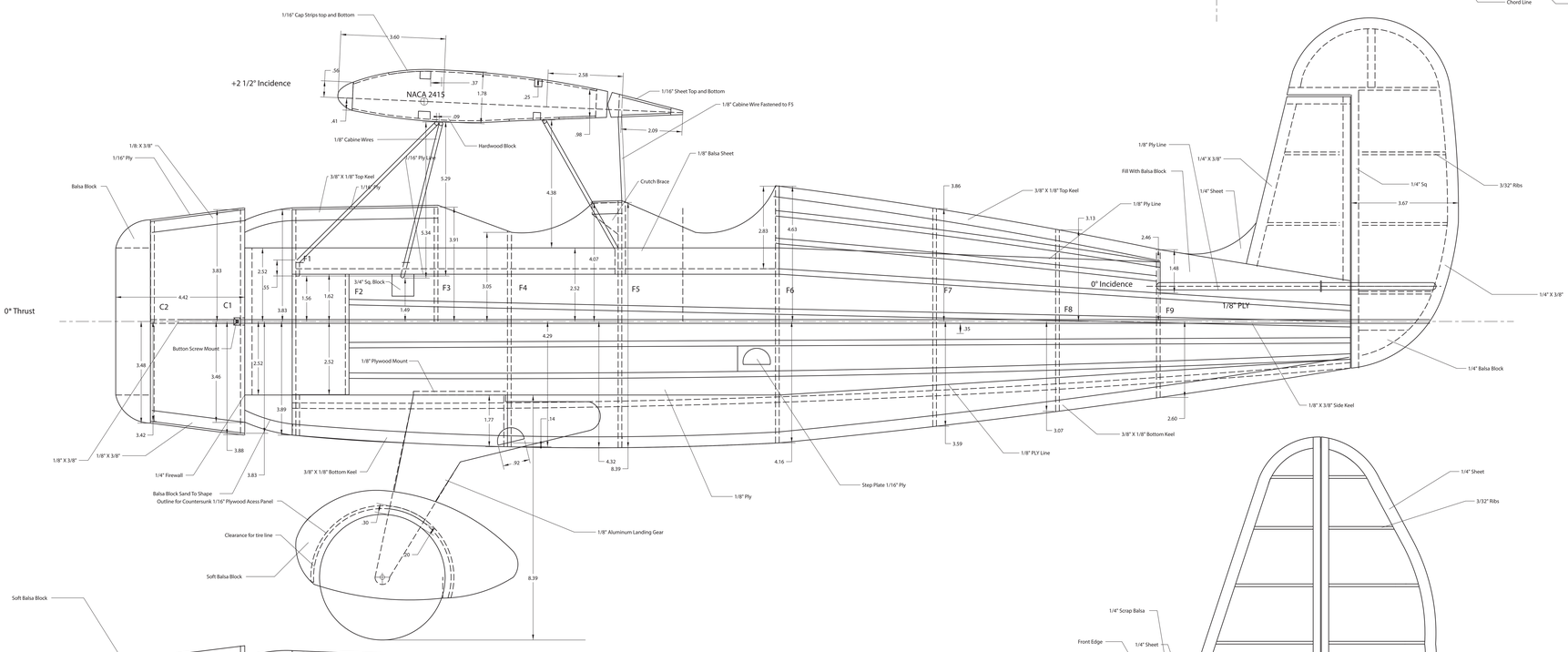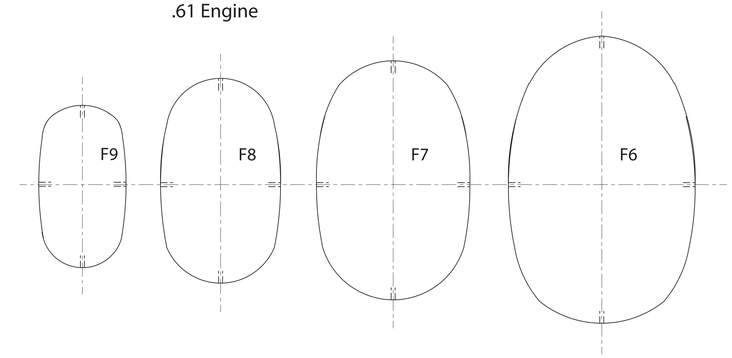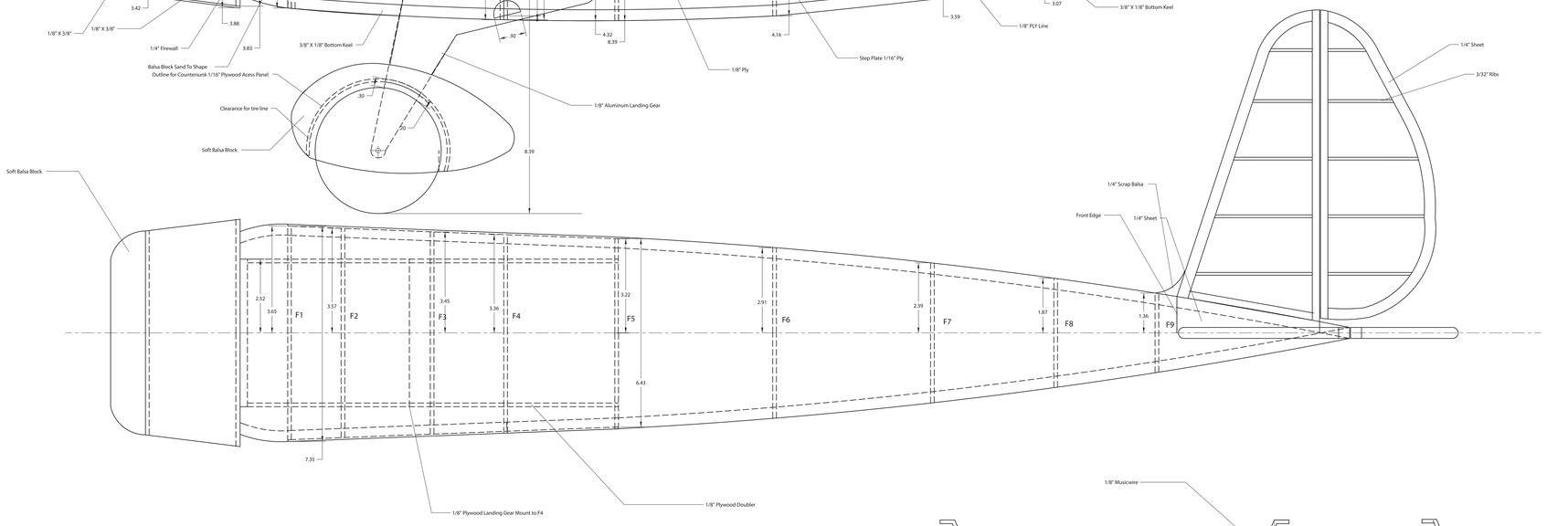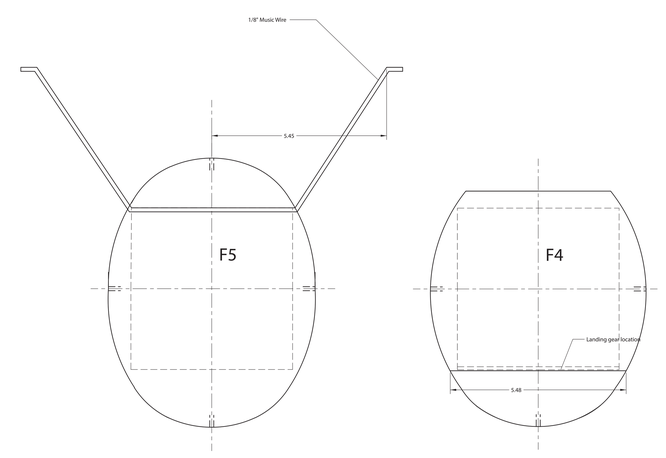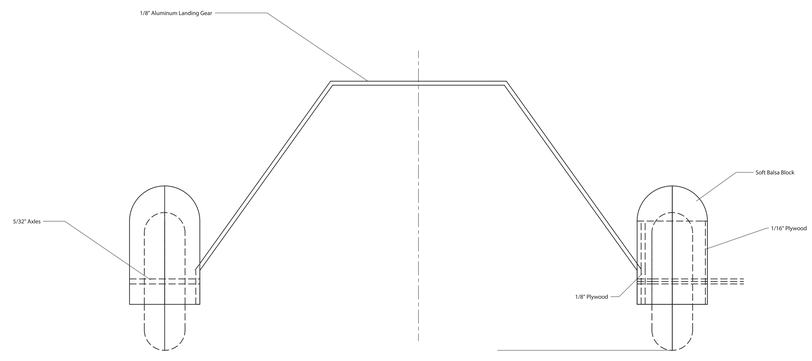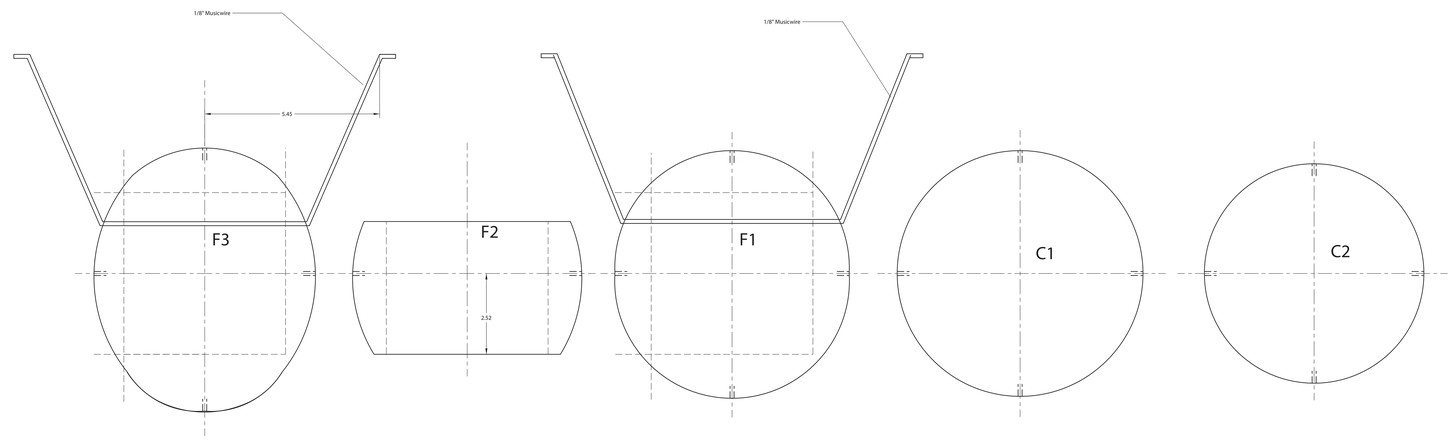
Wing Area 839 Sq. In.
Wing Chord 11.8129
Wingspan 71"
.61 Engine