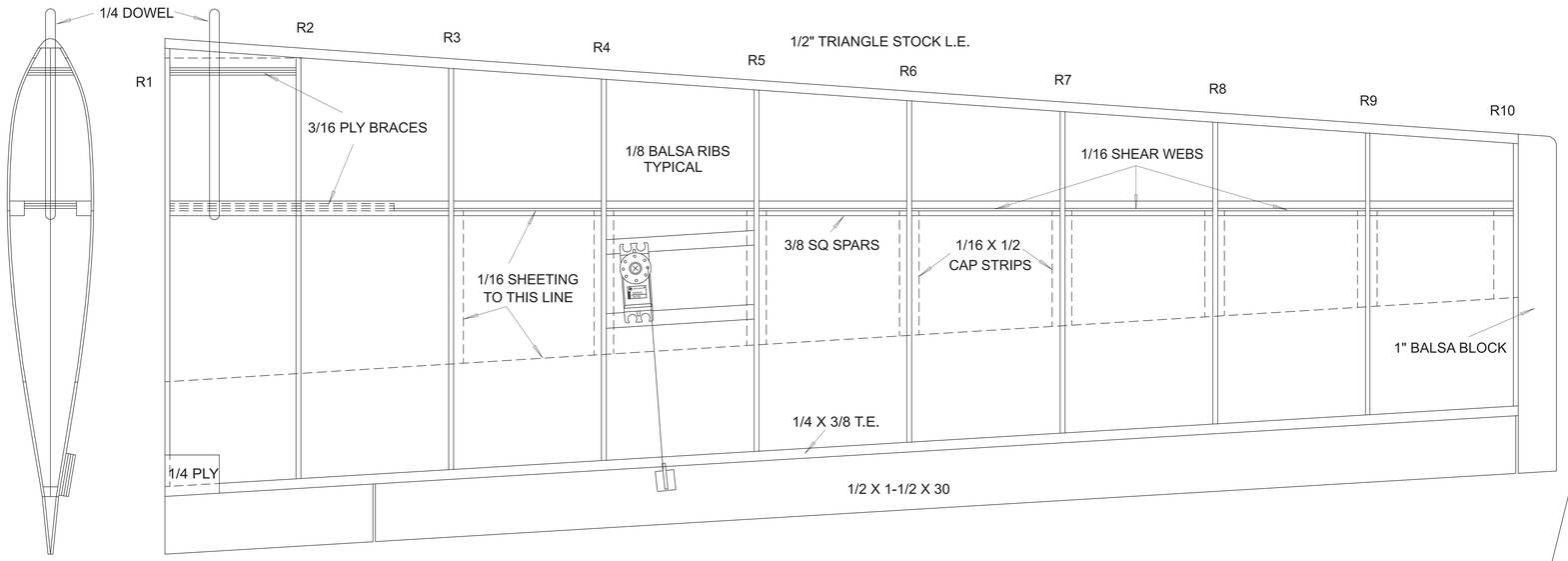

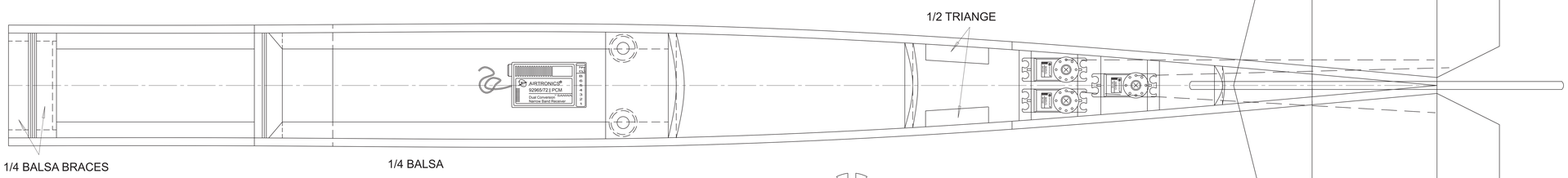

OMIT CANOPY AND TURTLE DECK FOR A "STICK TYPE" MODEL
WING MOUNTING BOLTS MAY THEN BE INSTALLED FROM THE TOP
ALL INCIDENCES ARE ZERO - ZERO (1DEGREE DOWN AND RIGHT MAY BE USED FOR ENGINE
WING SHOULD BE BUILT ON A JIG

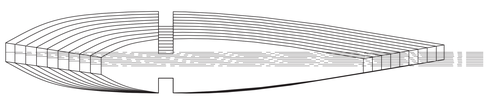
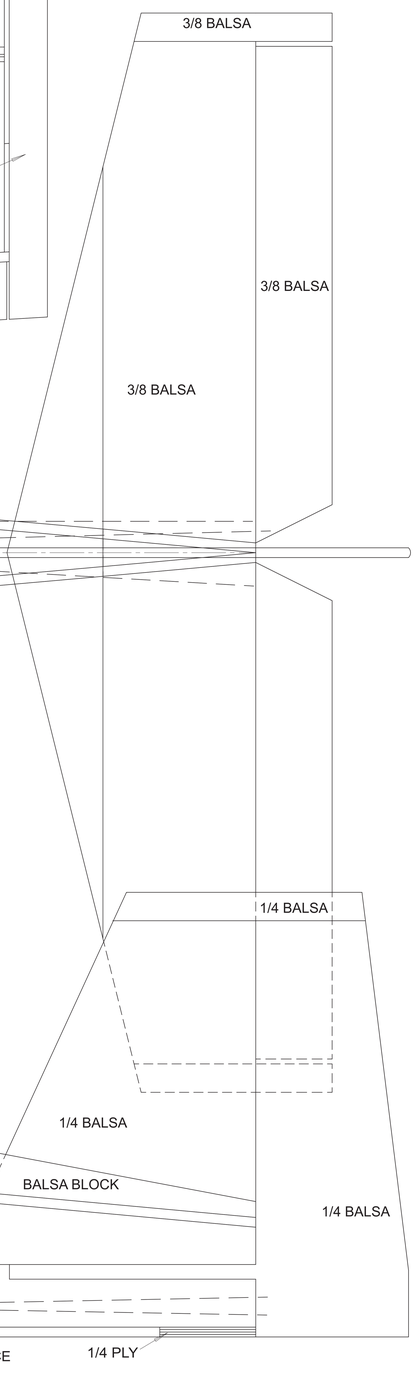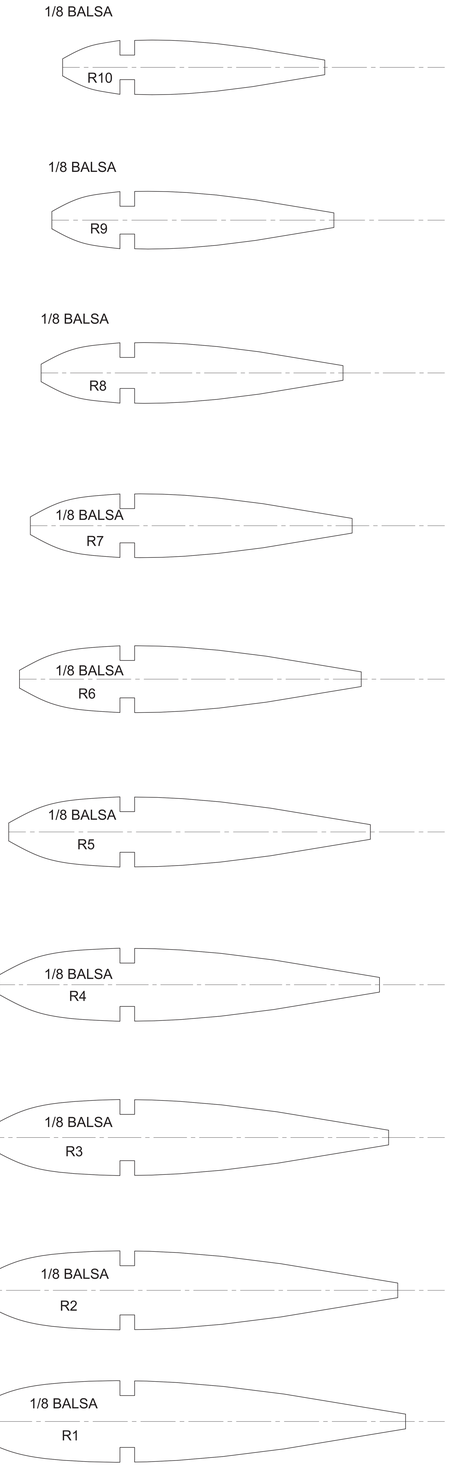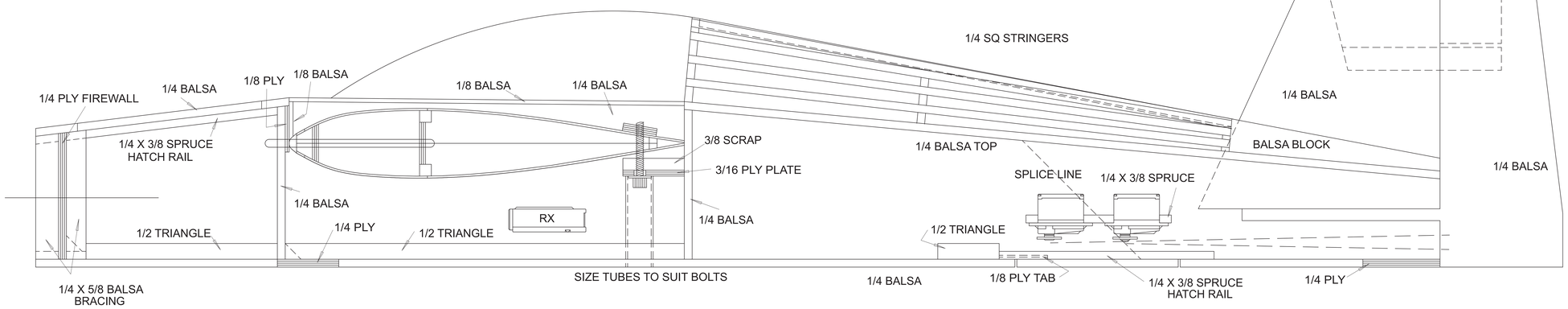
WING IS STRAIGHT ON BOTTOM GIVING IT ANHEDRAL