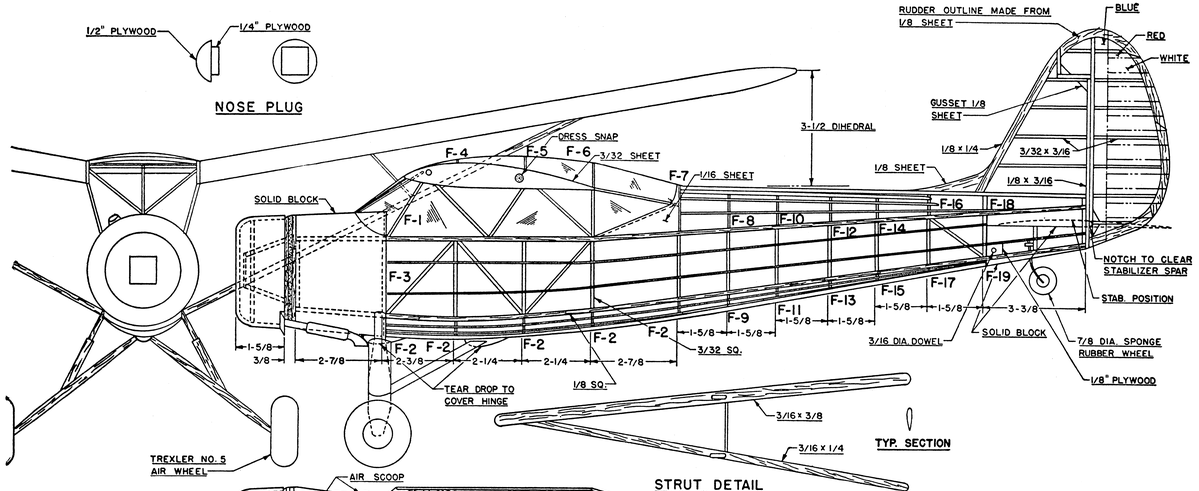

FLYING SCALE	STINSON 0-49	
SPAN 45 IN.		
AREA 259 SQ. IN.	BUILT BY DEL SWARTZ	1
WEIGHT 8 oz.	DRAWN BY JACK KELLER	

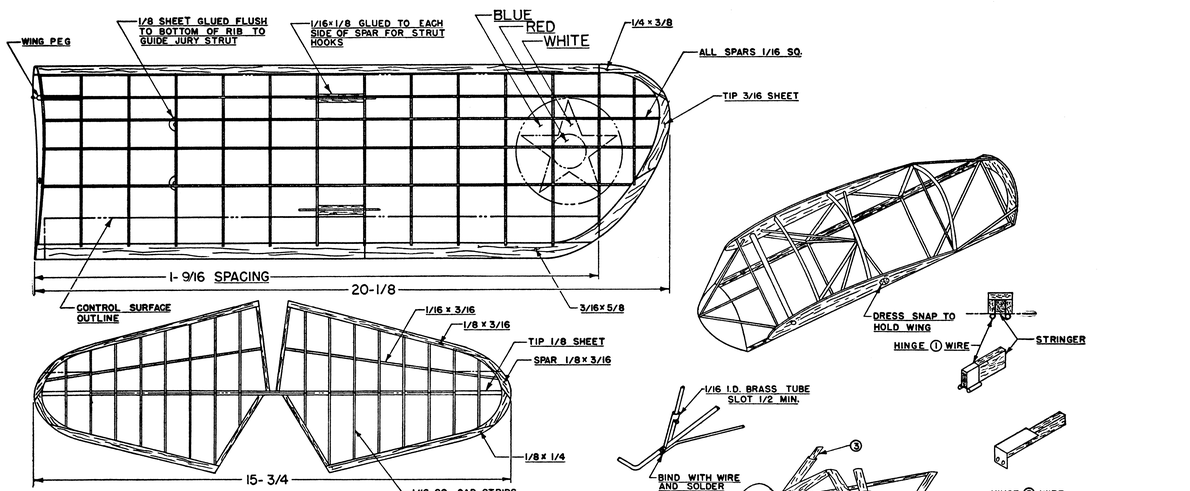

FLYING SCALE	STINSON 0-49	
SPAN 45 IN.		
AREA 259 SQ. IN.	BUILT BY DEL SWARTZ	2
WEIGHT 8 oz.	DRAWN BY JACK KELLER	