'FLEA FLI'

Add Tip Blocks After Wing Is Completely Sheeted But Before Ailerons Are Cut Out. Sand Wing Completely Before Cutting Out Ailerons.

Wing Top View

Sheeting Omitted
Wing Bottom View

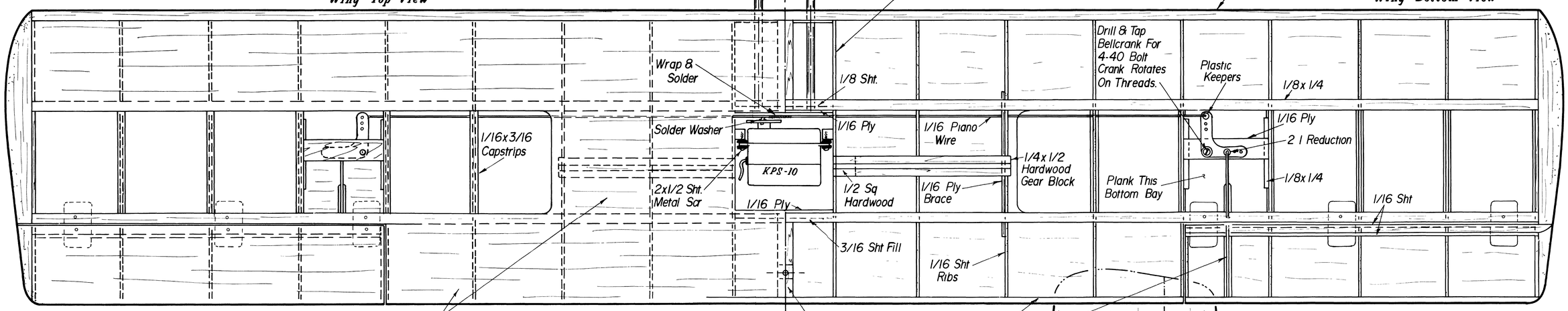

NOTE:
Cut Out Aileron After Sheeting Wing Panel

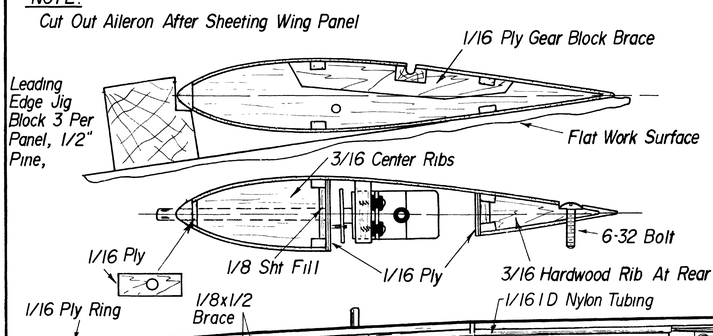

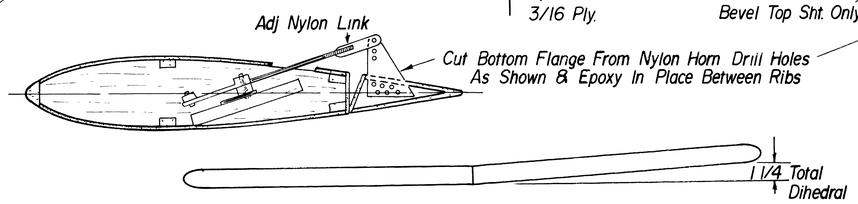

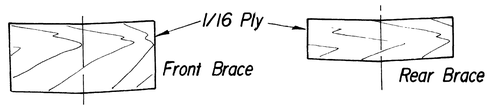

Cut Servo Mounts From 1/4 Maple Motor Mount Stock. Note Angle To Allow For Dihedral. Pre-Drill 1/16 Holes To Allow Servo Mounting With 2x1/2 Sht Metal Screws. Epoxy Glue Mounts To 1/16 Ply Ribs. Screw Blocks To Servo Before Gluing To Insure Alignment.

After Wing Panels Are Completely Finished (Less Covering) And Center Bottom Planking, Sand Center Ribs For Correct Dihedral Angle And Join With Structural Epoxy. Add Dihedral Brace At This Time.

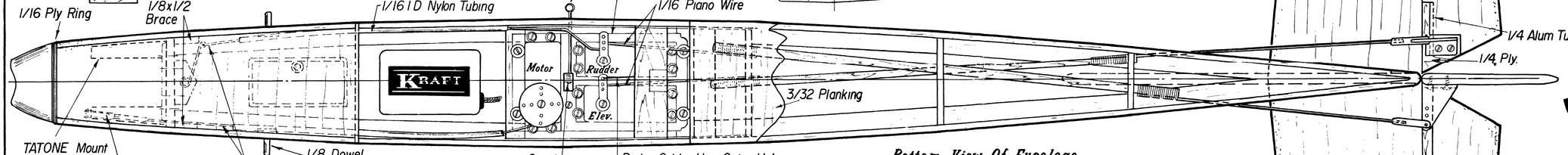

Bottom View Of Fuselage

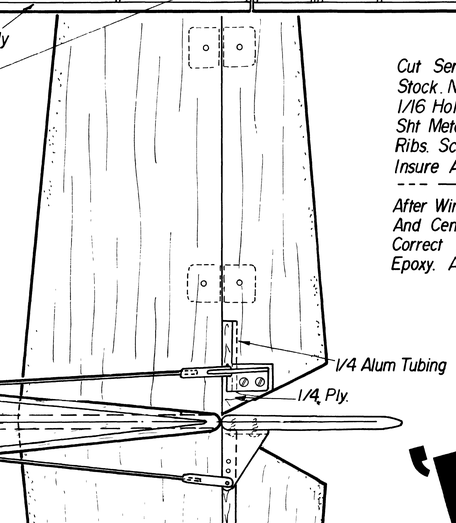

66% Scale Of Mk III "QWIK-FLI"
Wing Span 38 3/4
Wing Area 270 Sq. In
Weight 2 5 to 2 75 Lbs
Designed & Drawn By Phil Kraft
Traced for M A N by Al. Novotnik

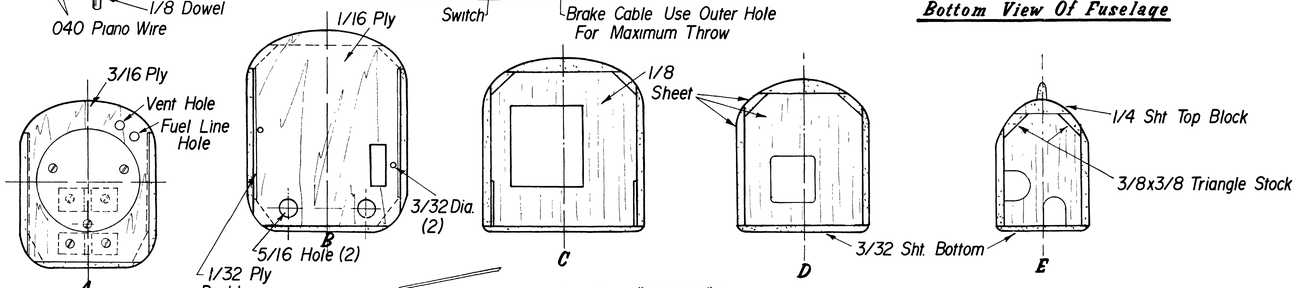

RECOMMENDED POWER

O.S. .19	ENYA .19
VECO .19	WEBRA .20
SUPER TIGRE .23	

Tank - Pylon Brand RST-4
Nylon Horns MIDWEST
Hinges DU-BRO

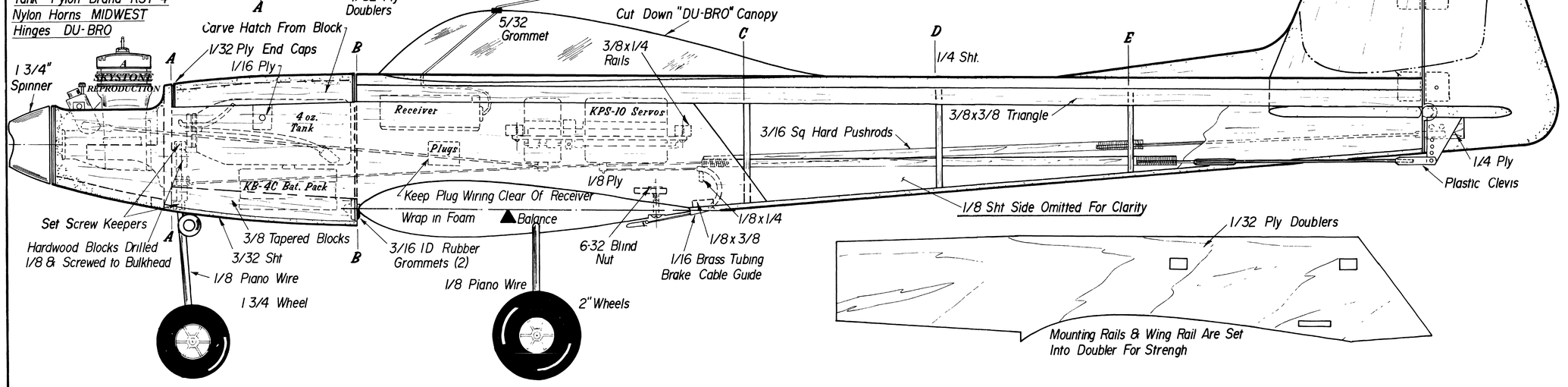

from MODEL AIRPLANE NEWS
551 FIFTH AVENUE • NEW YORK 17, N.Y.