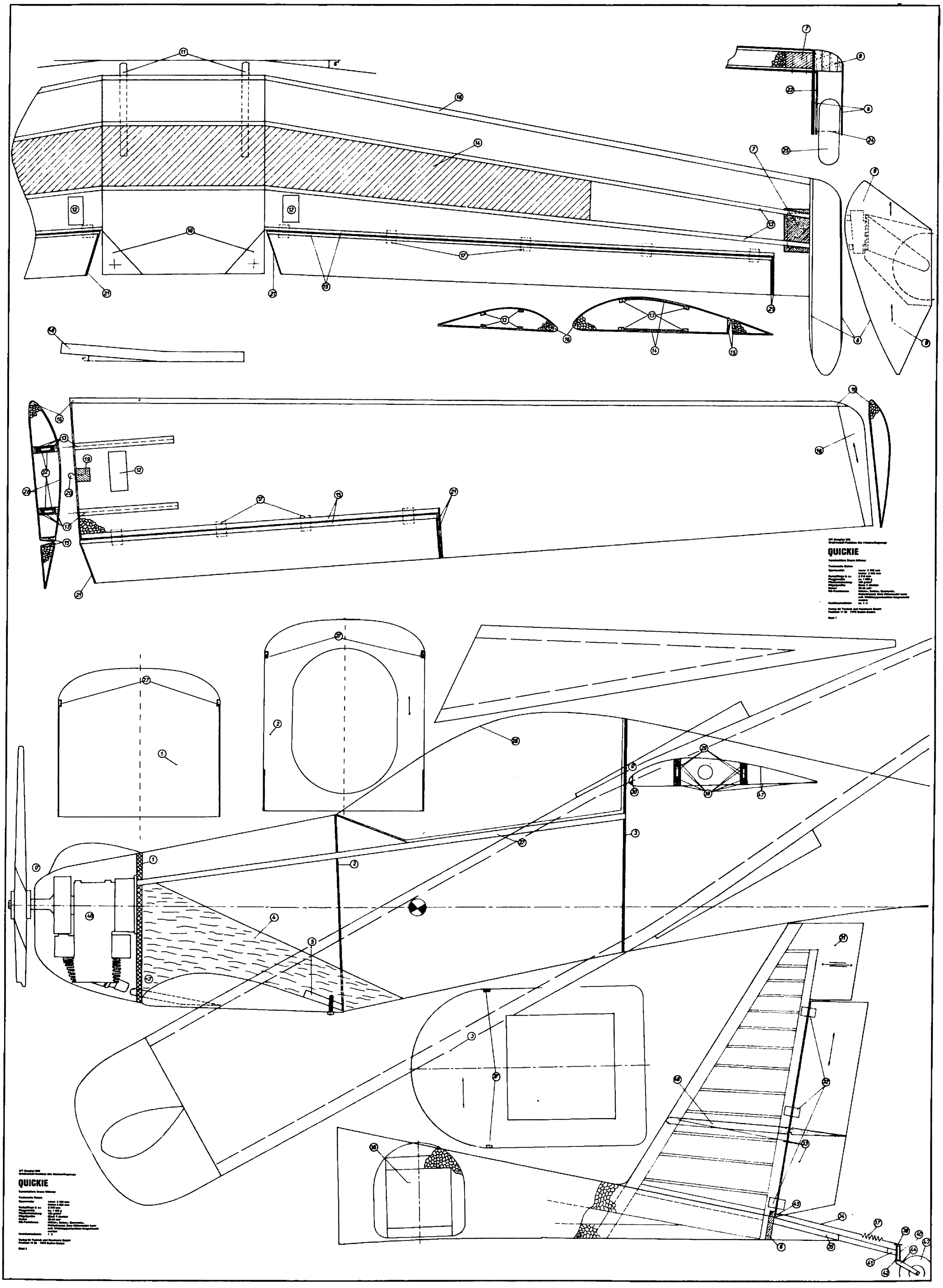
QUICKIE
QUICKIE