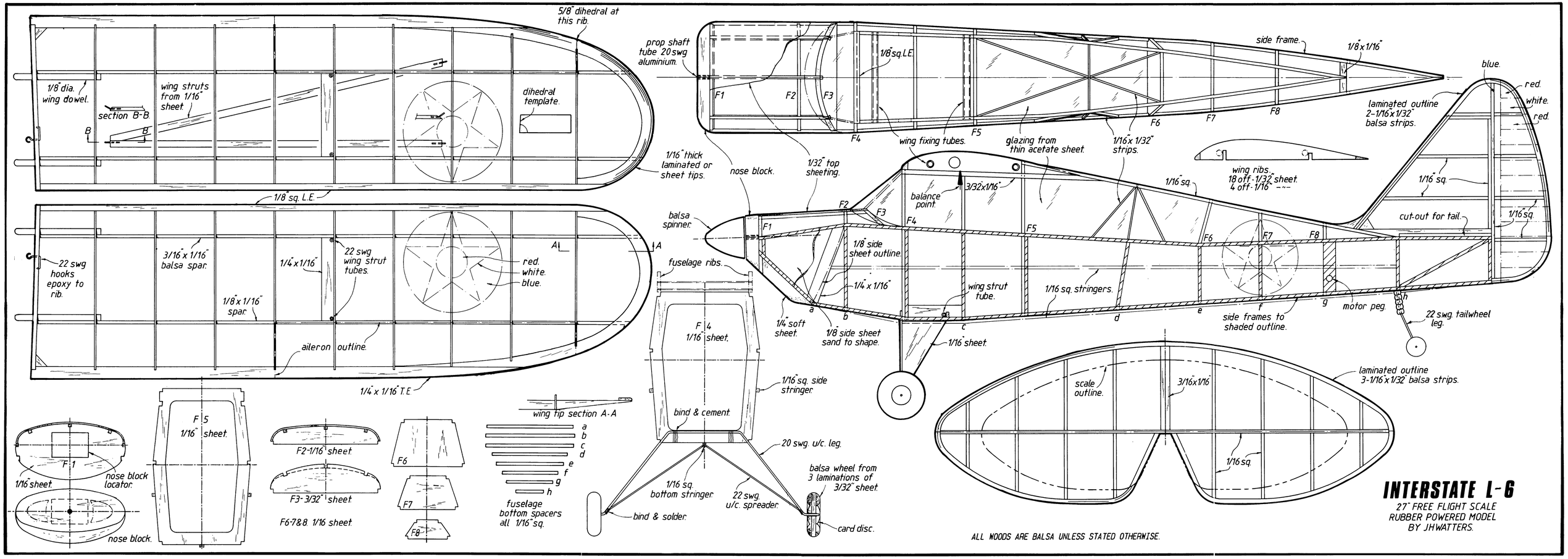
5/8" dihedral at this rib.
1/8" dia. wing dowel.
wing struts from 1/16" sheet
section B-B.
B
B
dihedral template.
1/8" sq. L.E.
22 swg hooks epoxy to rib.
3/16" x 1/16" balsa spar.
1/4" x 1/16"
22 swg wing strut tubes.
1/8" x 1/16" spar.
red.
white.
blue.
A
A
aileron outline.
1/4" x 1/16" T.E.
F-1
1/16" sheet.
nose block locator.
nose block.
F-5
1/16" sheet.
F2-1/16" sheet.
F3-3/32" sheet.
F6-7&8 1/16 sheet.
F6
F7
F8
wing tip section A-A
a
b
c
d
e
f
g
h
fuselage bottom spacers all 1/16" sq.
prop shaft tube 20 swg aluminium.
1/8" sq. L.E.
F1
F2
F3
F4
F5
F6
F7
F8
side frame.
1/8" x 1/16"
wing fixing tubes.
glazing from thin acetate sheet.
1/16" x 1/32" strips.
1/16" thick laminated or sheet tips.
nose block.
1/32" top sheeting.
balsa spinner.
fuselage ribs.
F-4
1/16" sheet.
1/16" sq. side stringer.
bind & cement.
20 swg. u/c. leg.
1/16 sq. bottom stringer.
22 swg. u/c. spreader.
balsa wheel from 3 laminations of 3/32" sheet.
bind & solder.
card disc.
3/32" x 1/16"
balance point.
1/8" side sheet outline.
1/4" x 1/16"
1/4" soft sheet.
1/8 side sheet sand to shape.
wing strut tube.
1/16" sheet.
1/16 sq. stringers.
a
b
c
d
e
f
g
h
side frames to shaded outline.
motor peg.
22 swg. tailwheel leg.
blue.
red.
white.
red.
laminated outline 2-1/16" x 1/32" balsa strips.
wing ribs. 18 off-1/32" sheet. 4 off-1/16" -"-
1/16" sq.
1/16" sq.
cut-out for tail.
1/16" sq.
scale outline.
3/16" x 1/16"
laminated outline 3-1/16" x 1/32" balsa strips.
1/16 sq.
INTERSTATE L-6
27" FREE FLIGHT SCALE RUBBER POWERED MODEL BY JHWATTERS.
ALL WOODS ARE BALSA UNLESS STATED OTHERWISE.