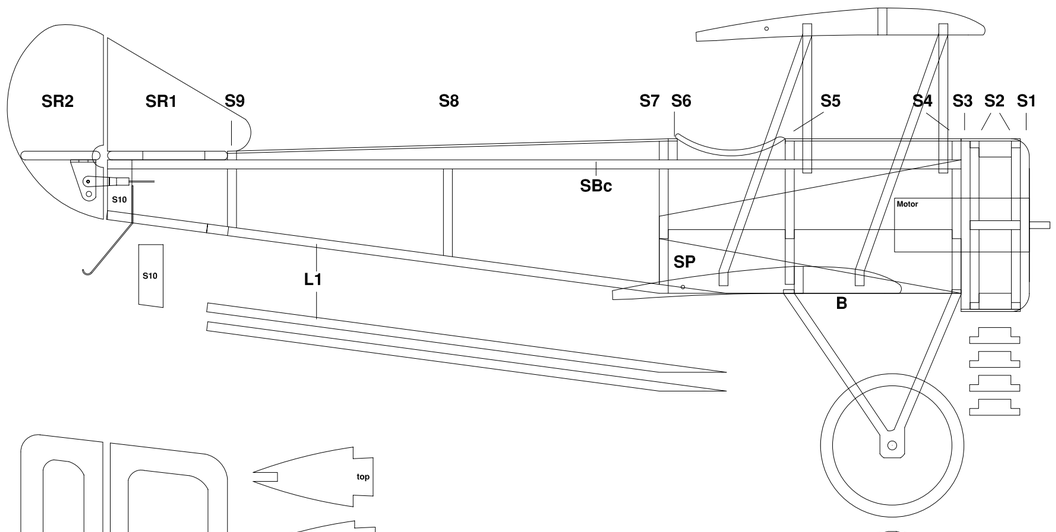

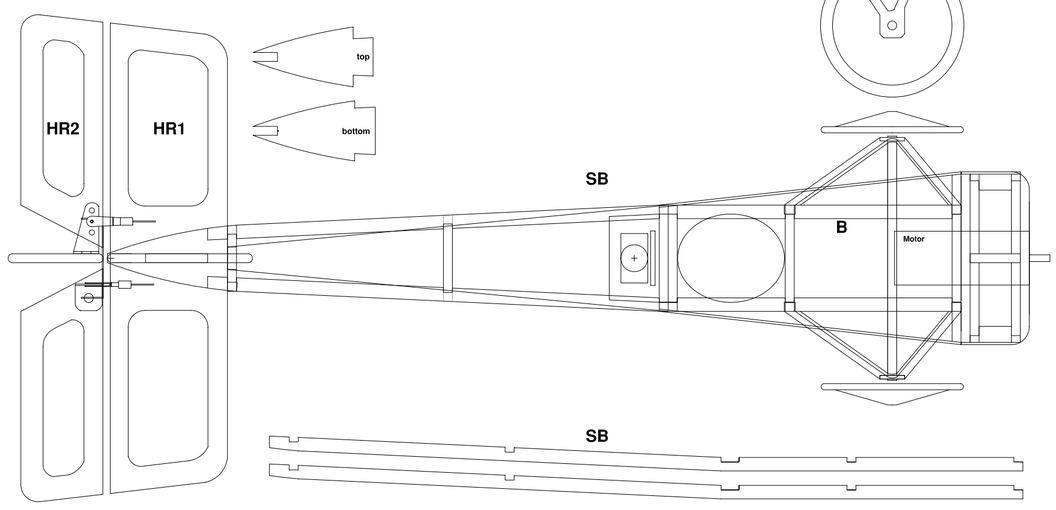

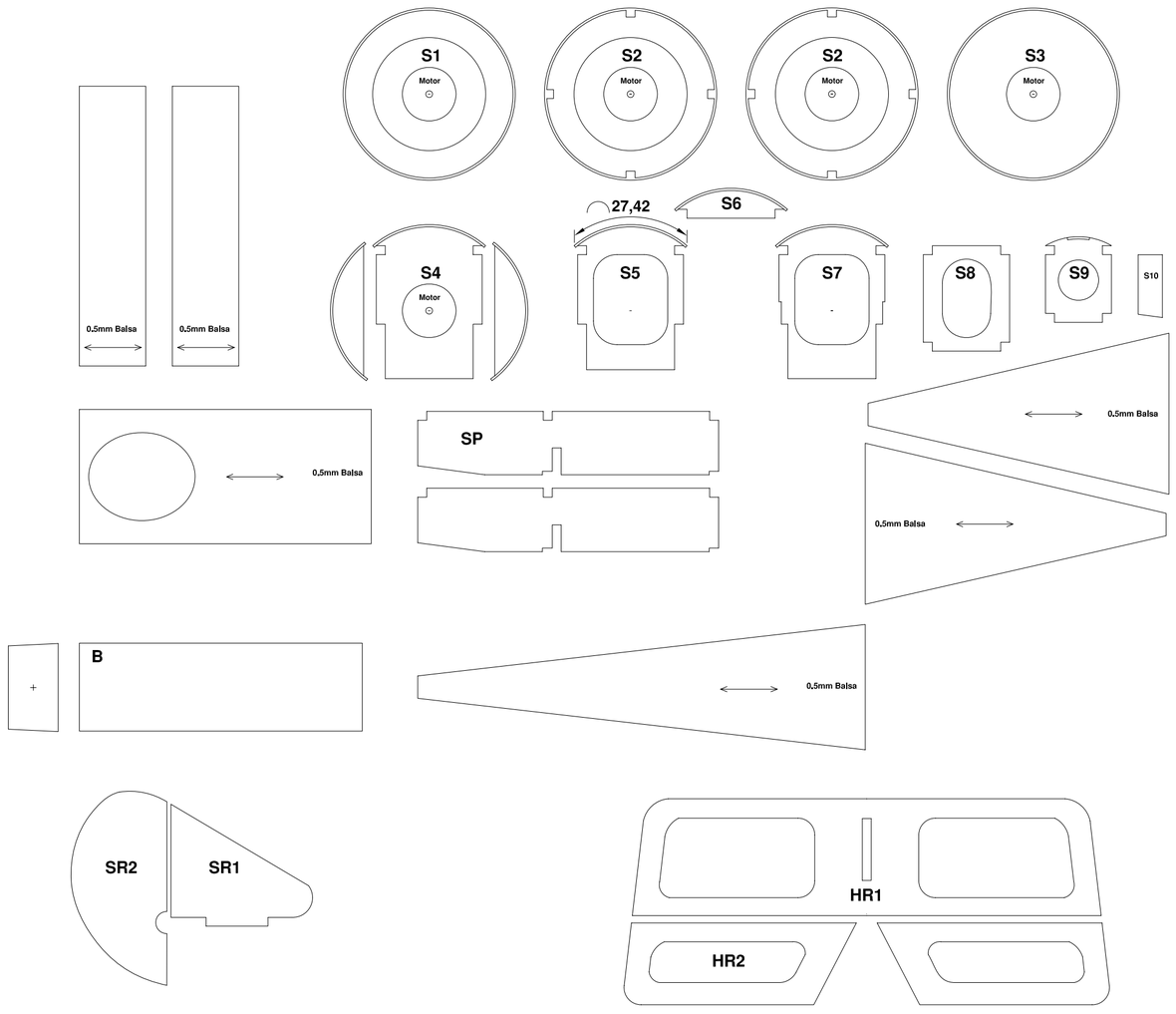

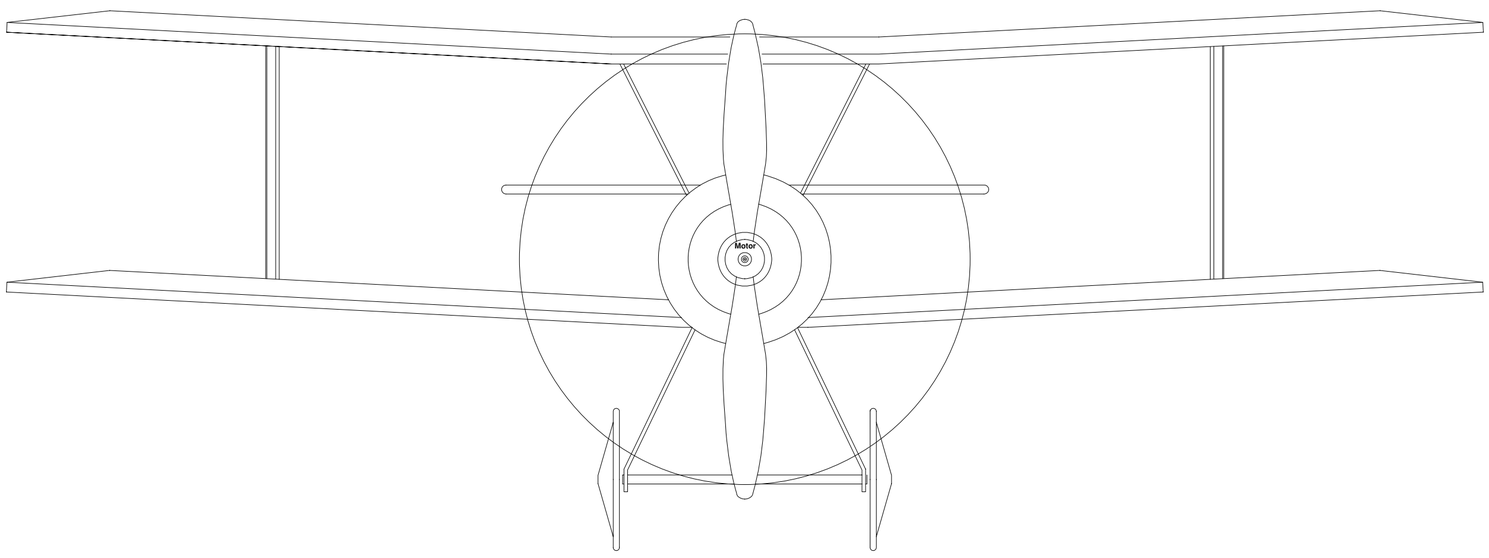

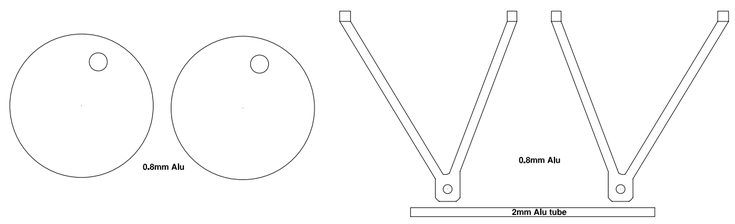

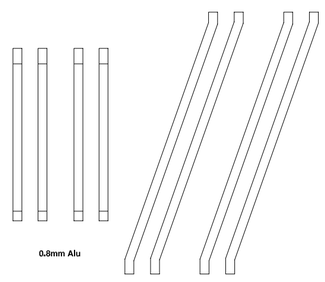

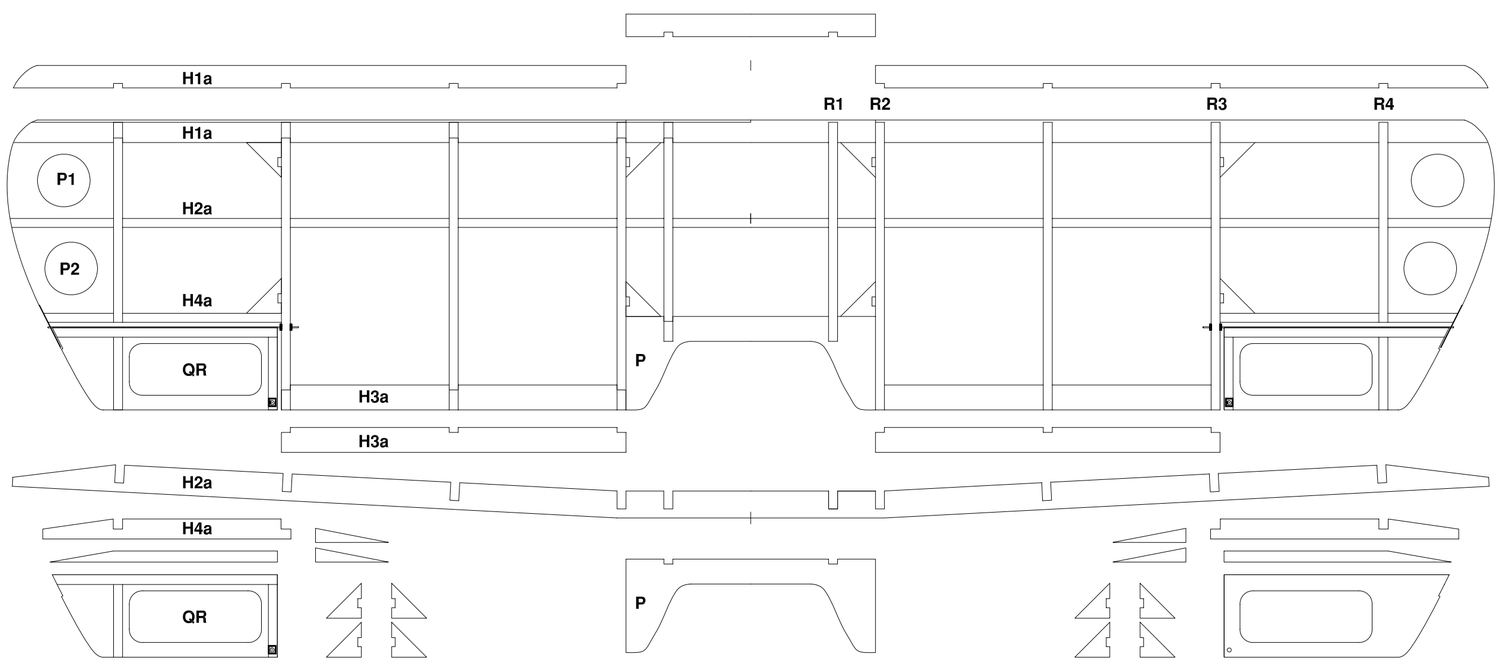

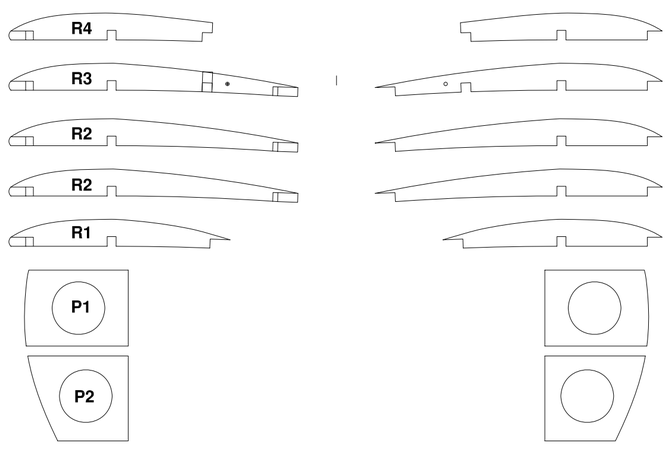

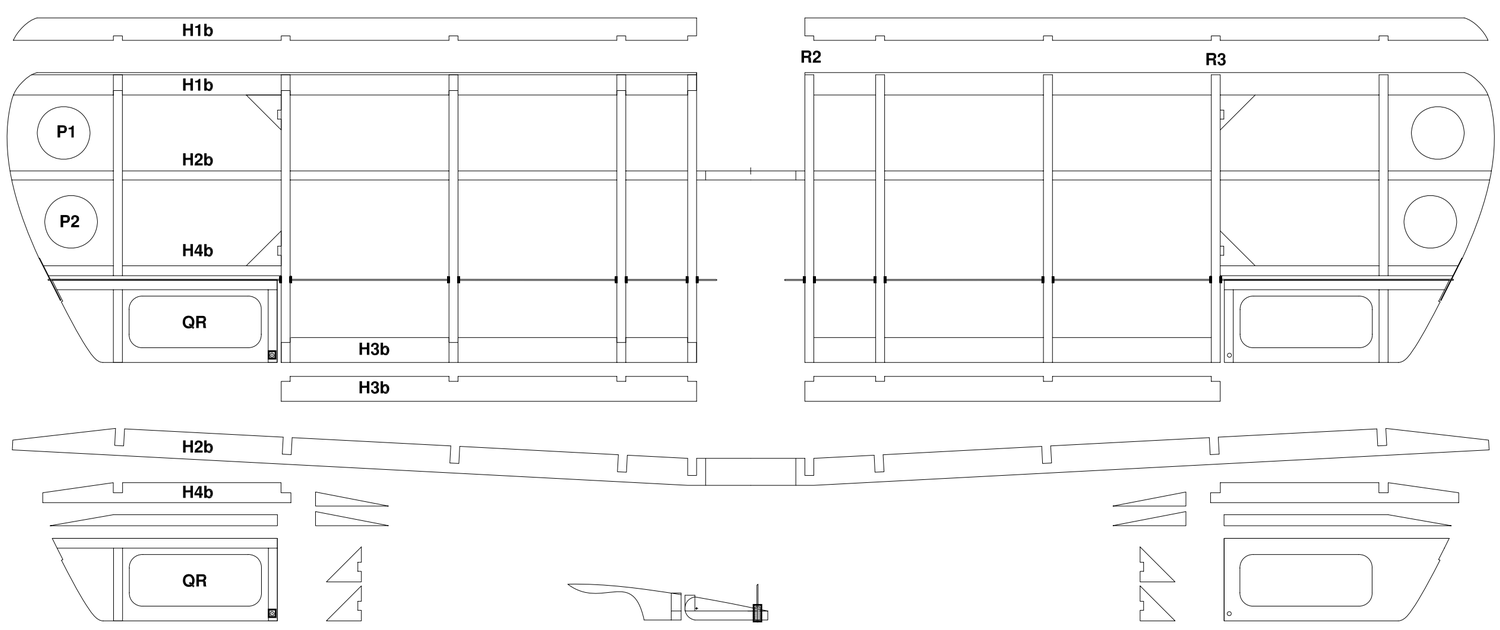

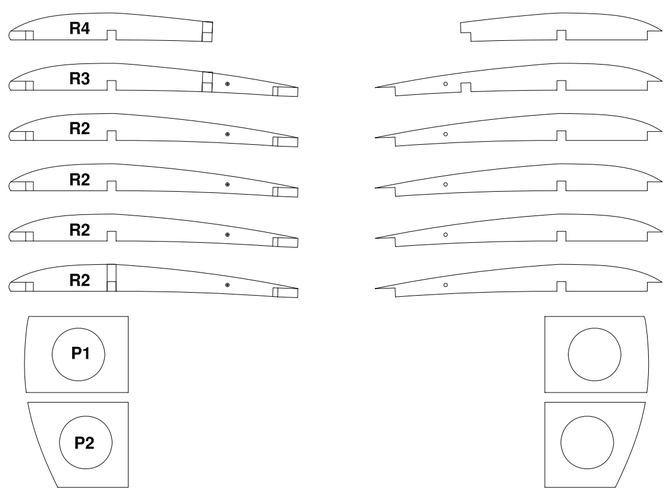

Sopwith Pup

Peanut Scale by Arno Diemer