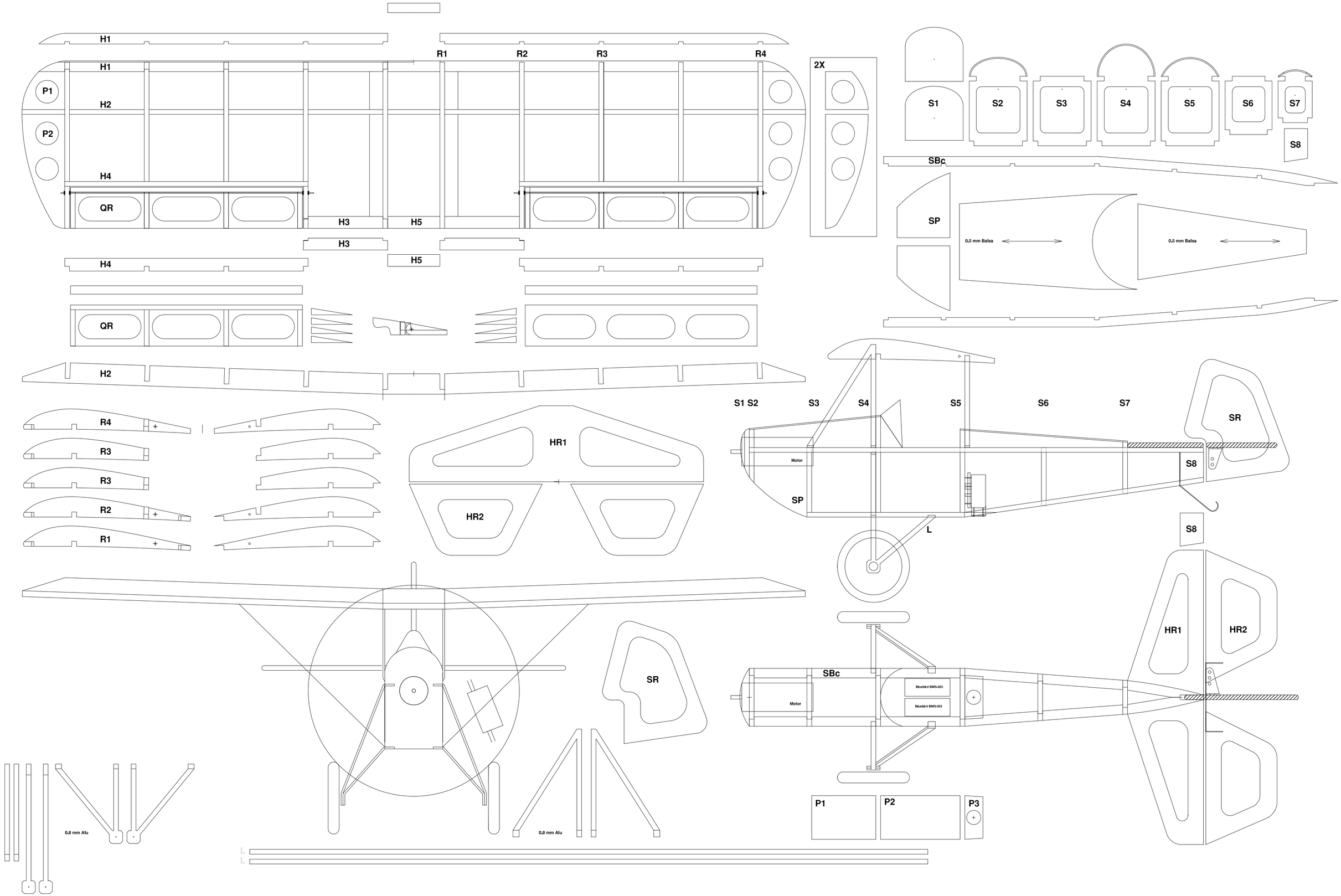

FRED

Peanut Scale by Arno Diemer