MM	IN
0.4	1/64
0.8	1/32
1	1/25
1.2	1/20
1.5	1/16
2	1/12
3	1/8

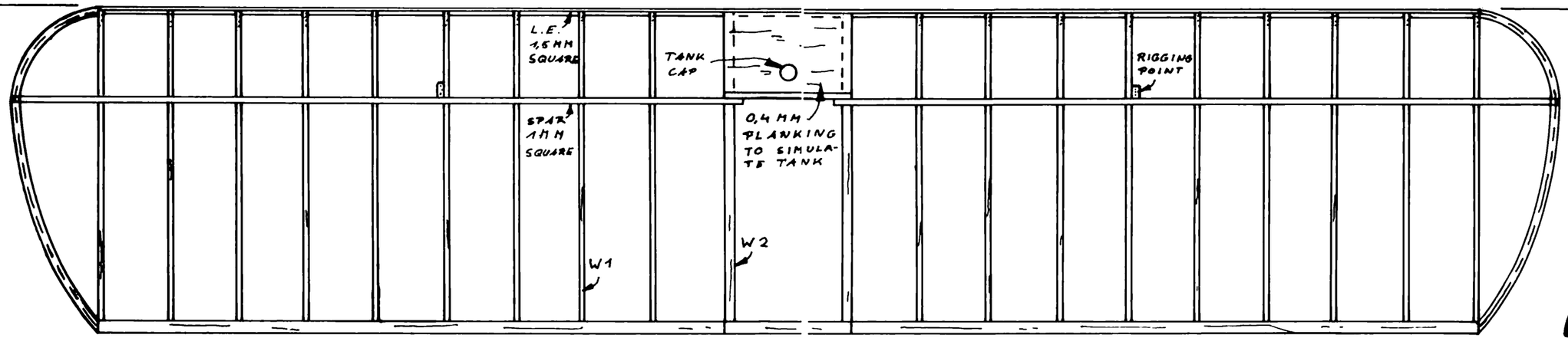

LAMINATE WINGTIPS FROM BASSWOOD OR BALSA

DASHBOARD GLUE TO F3

SECTION THROUGH WING TIP

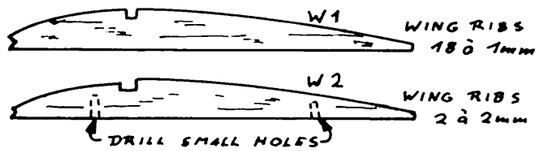

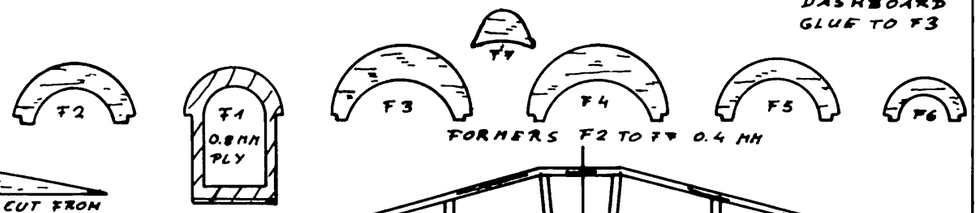

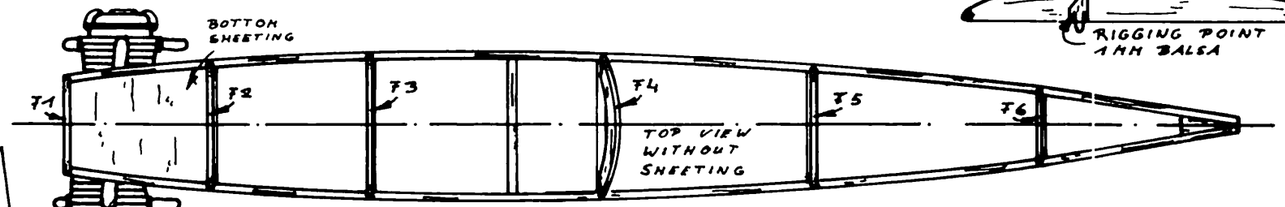

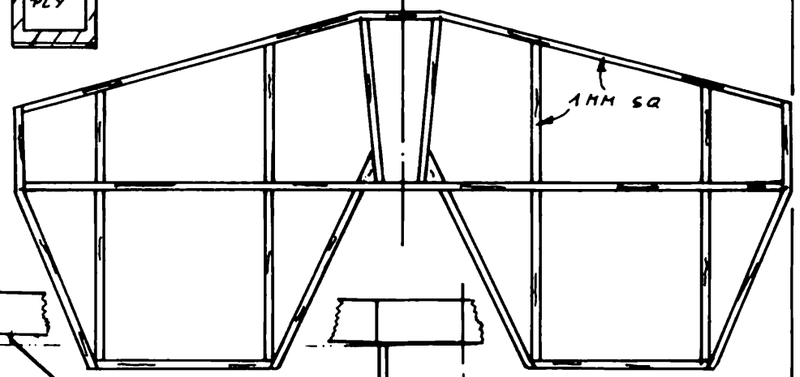

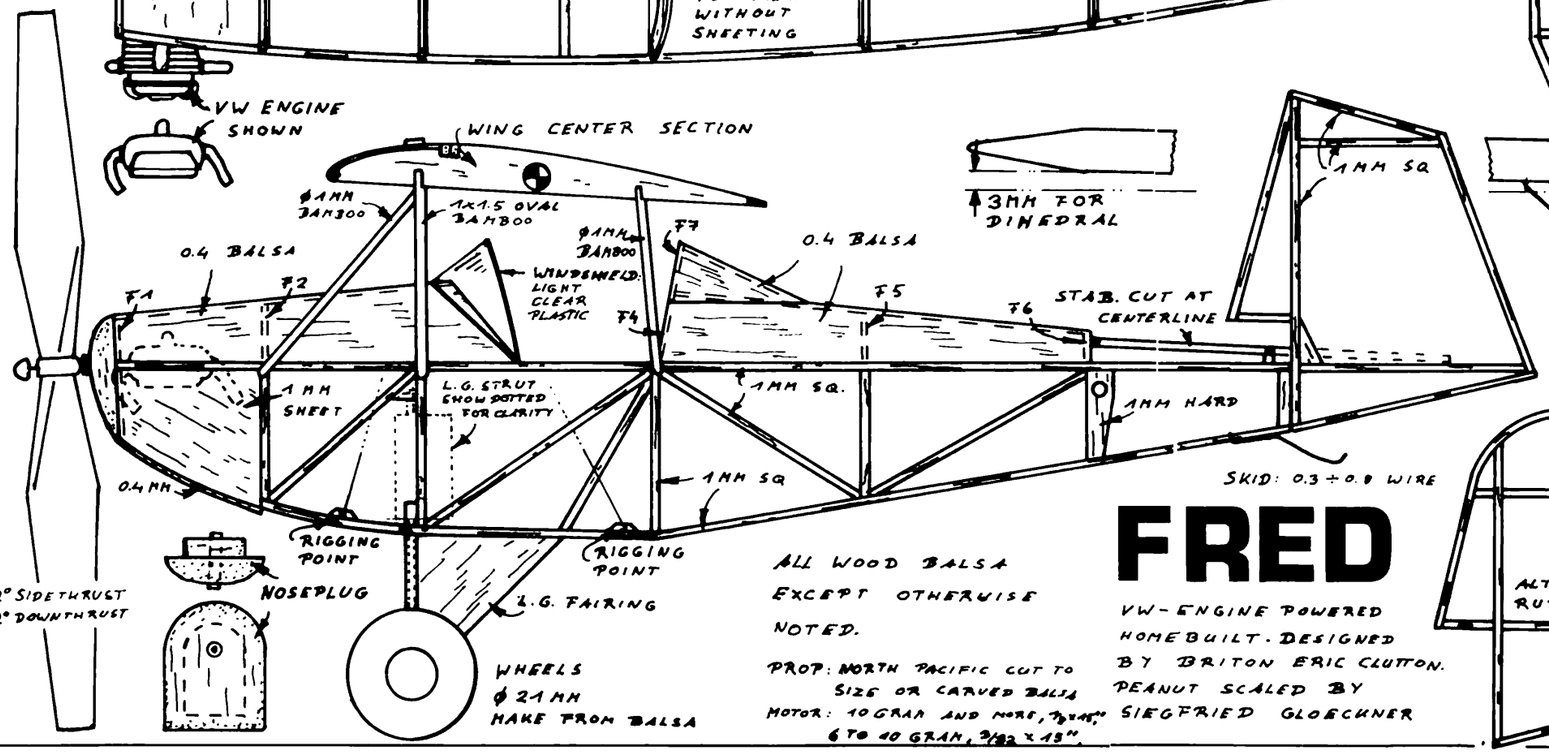

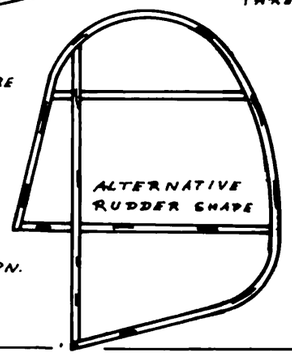

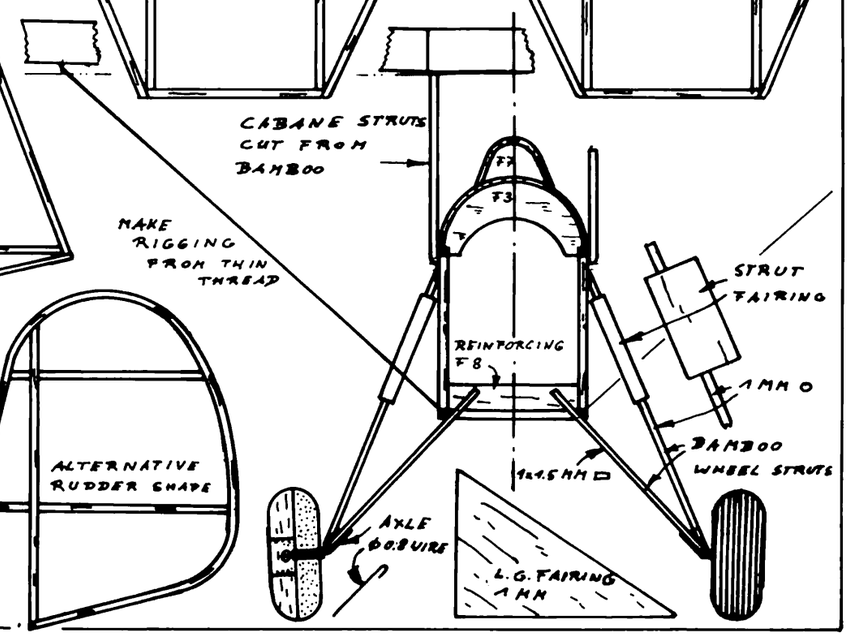

FRED

ALL WOOD BALSA EXCEPT OTHERWISE NOTED.

PROP: NORTH PACIFIC CUT TO SIZE OR CARVED BALSA

MOTOR: 10 GRAM AND MORE, 3/32 x 15"
6 TO 10 GRAM, 3/32 x 13".

VW-ENGINE POWERED HOMEBUILT. DESIGNED BY BRITON ERIC CLUTTON. PEANUT SCALED BY SIEGFRIED GLOECKNER