STEP ONE

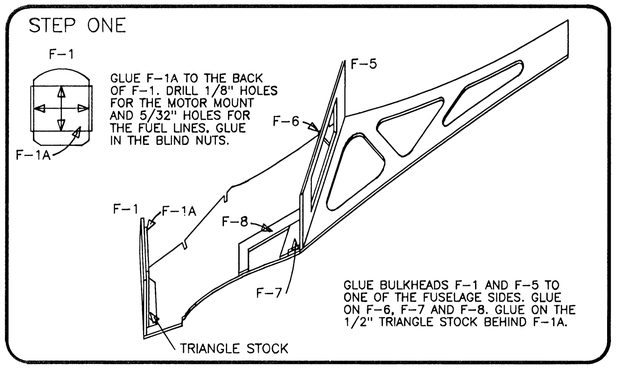

GLUE F-1A TO THE BACK OF F-1. DRILL 1/8" HOLES FOR THE MOTOR MOUNT AND 5/32" HOLES FOR THE FUEL LINES. GLUE IN THE BLIND NUTS.

GLUE BULKHEADS F-1 AND F-5 TO ONE OF THE FUSELAGE SIDES. GLUE ON F-6, F-7 AND F-8. GLUE ON THE 1/2" TRIANGLE STOCK BEHIND F-1A.

STEP TWO

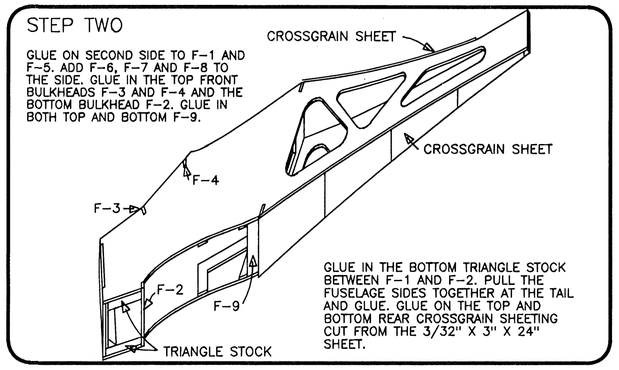

GLUE ON SECOND SIDE TO F-1 AND F-5. ADD F-6, F-7 AND F-8 TO THE SIDE. GLUE IN THE TOP FRONT BULKHEADS F-3 AND F-4 AND THE BOTTOM BULKHEAD F-2. GLUE IN BOTH TOP AND BOTTOM F-9.

GLUE IN THE BOTTOM TRIANGLE STOCK BETWEEN F-1 AND F-2. PULL THE FUSELAGE SIDES TOGETHER AT THE TAIL AND GLUE. GLUE ON THE TOP AND BOTTOM REAR CROSSGRAIN SHEETING CUT FROM THE 3/32" X 3" X 24" SHEET.

STEP THREE

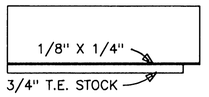

GLUE THE 1/8" X 1/4" STRIPS TO THE REAR EDGE OF THE WING PANELS.

EPOXY THE WING HALVES TOGETHER FLAT ON THE TABLE WITH NO DIHEDRAL. CUT OUT THE WING TIP TEMPLATE AND MARK EACH WING TIP. CUT THE WING TIP SHAPE WITH A JIG SAW OR SANDING BLOCK. MARK THE CENTER LINE OF THE TIPS AND BEVEL SAND TO WITHIN 1/8" OF THE CENTERLINE. ROUND OFF THE TAPER AND THE ENDS. CUT SLOTS IN THE BOTTOM WING FOR THE LANDING GEAR BLOCKS AND EPOXY THE BLOCKS INTO THE WING.

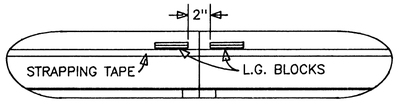

MAKE THE AILERON LINKAGE AND GLUE INTO THE 3" CENTER LENGTH OF THE TAPERED STOCK ON THE TOP WING.

APPLY STRAPPING TAPE TOP AND BOTTOM TO BOTH WINGS. THE LOWER WING AILERONS CAN BE GLUED TO THE WING OR CAN BE LINKED TO THE AILERONS IN THE TOP WING WITH QUICK LINKS AND CUT OFF CONTROL HORNS.

INSTRUCTIONS

TOOLS NEEDED TO BUILD THIS MODEL ARE AN X-ACTO KNIFE, PLIERS, SCREWDRIVER, DRILL WITH 3/32", 1/8", 5/32" AND 3/16" DRILL BITS AND BOTH MEDIUM AND FINE SANDPAPER. FOR GLUE WE RECOMMEND THE MEDIUM VISCOSITY CYA FOR ALL WOOD TO WOOD JOINTS. USE WHITE GLUE OR EPOXY TO GLUE WOOD TO FOAM. USE EPOXY TO GLUE THE WING HALVES TOGETHER.

STEP ONE: BUILD THE MODEL USING THE PICTURE SEQUENCE AS A GUIDE. GLUE F-1A TO BACK SIDE OF F-1. USE THE CORNERS OF THE NOTCHES ON F-1 TO POSITION F-1A ON THE BACK SIDE OF F-1. POSITION THE MOTOR AND MOTOR MOUNT ON F-1 SO THAT THE MUFFLER WILL CLEAR THE FUSELAGE SIDE AS SHOWN ON THE PLAN. DRILL THE HOLES IN F-1 FOR THE MOTOR MOUNT AND GLUE IN THE BLIND NUTS. DRILL F-1 FOR THE THROTTLE LINKAGE AND THE FUEL LINES. GLUE F-1 AND F-5 TO ONE OF THE FUSELAGE SIDES USING A SQUARE TO KEEP THEM STRAIGHT. GLUE F-6 , F-7, F-8, AND THE TRIANGLE STOCK BEHIND F-1A TO THAT SIDE.

STEP TWO: GULE THE SECOND FUSELAGE SIDE TO F-1 AND F-5. GLUE F-6, F-7, F-8, AND THE TRIANGLE STOCK BEHIND F-1A. DRILL BULKHEADS F-2 AND F-4 WITH A 3/16" DRILL USING THE PUNCH MARKS AS A GUIDE. GLUE IN F-2, F-3 AND F-4 AND THE WING MOUNTS F-9 BOTH TOP AND BOTTOM. GLUE IN THE TRIANGLE STOCK BETWEEN F-1 AND F-2. PULL THE FUSELAGE SIDES TOGETHER AT THE TAIL AND GLUE. FROM THE 3/32" X 3" X 24" BALSA SHEET CUT THE CROSS GRAIN TOP AND BOTTOM REAR SHEETING AND GLUE.

STEP THREE: GLUE THE 1/8" X 1/4" STRIPS TO THE TRAILING EDGE OF THE FOUR WING PANELS. EPOXY THE TWO PAIRS TOGETHER FLAT ON THE TABLE WITH NO DIHEDRAL. ALIGN THE FLASHING ON THE LEADING EDGE AND TRAILING EDGE AS THE EPOXY SETS. USE PINS IF NECESSARY TO KEEP THEM ALIGNED. CUT OUT THE PAPER WING TIP TEMPLATE AND MARK THE WING TIP SHAPE ON THE WINGS. CUT THE TIP SHAPE USING A FINE SAW AND SANDING BLOCK. MARK A LINE ON THE CUT END MIDWAY BETWEEN THE TOP AND BOTTOM FROM FRONT TO BACK. BEVEL SAND THE WING TIPS TO SHAPE USING THE INSTRUCTIONS ON THE TEMPLATE. CUT THE HOLE IN THE TOP WING FOR THE AILERON SERVO AND NOTCH OUT THE BOTTOM WING FOR THE LANDING GEAR BLOCKS. EPOXY THE LANDING GEAR BLOCKS INTO THE BOTTOM WING AND DRILL UP THROUGH THE BLOCKS WITH A 3/32" DRILL. IF YOUR ARE NOT GOING TO HAVE MOVEABLE AILERONS ON THE BOTTOM WING, YOU CAN GLUE THE 3/4" TRAILING EDGE TO THE WING IN ONE PIECE. OTHERWISE FIT THE AILERONS AND CENTER THE SAME ON BOTH WINGS. BEND AND ASSEMBLE THE AILERON LINKAGE AS SHOWN ON THE PLANS. NOTCH THE CENTER SECTION FOR THE LINKAGE AND GLUE IN PLACE AND GLUE TO THE WING. FIT THE AILERONS LEAVING A 3/32" SPACE BETWEEN THE FIXED AND MOVEABLE PARTS. APPLY A STRIP OF FIBERGLASS STRAPPING TAPE TOP AND BOTTOM TO BOTH WINGS ALONG THE THICKEST PART OF THE WINGS.

STEP FOUR: FIT BOTH WINGS TO THE FUSELAGE. DRILL THROUGH F-4 INTO THE TOP WING WITH A 3/16" DRILL FOR THE MOUNTING DOWEL. DO THE SAME THROUGH F-2 INTO THE BOTTOM WING AND EPOXY THE DOWELS INTO THE WINGS. DRILL TWO 3/32" HOLES THROUGH THE TRAILING EDGE OF THE WINGS AND F-9 FOR THE REAR MOUNTING SCREWS. INSTALL THE SCREWS THEN REMOVE THEM. PUT A DROP OF GLUE INTO EACH OF THE HOLES TO HARDEN THE WOOD.

STEP FIVE: CUT THE TOP FRONT PIECE FROM THE SHEET STOCK WITH THE GRAIN LENGTHWISE. GLUE IN PLACE AFTER BOTH ARE FITTED. WET THE WOOD ON THE OUTSIDE BEFORE BENDING. GLUE ON THE BOTTOM FRONT CROSSGRAIN SHEETING. USING THE TRIMMED COWL AS A GUIDE MARK F-1 AT THE BOTTOM CORNERS TO MATCH THE COWL CURVE AND SAND THE FUSELAGE TO SHAPE. FOR THE COWL MOUNTS, GLUE TWO STRIPS OF SCRAP PLYWOOD TOGETHER, THEN CUT OUT FOUR 3/8" SQUARE PIECES. GLUE THE FOUR PIECES OF PLYWOOD TO THE FOUR CORNERS OF F-1. MOUNT THE COWL BY DRILLING AND INSTALLING ONE SCREW AT A TIME. MOUNT THE ENGINE AND CUT THE COWL TO CLEAR THE MUFFLER. CUT A HOLE FOR THE GLOWPLUG ACCESS. ASSEMBLE THE ELEVATORS, REINFORCE THE DOWEL TO ELEVATOR JOINT WITH A 2" X 4" PIECE OF POLYMAT CLOTH (WRAP AROUND THE 1/8" DOWEL OVERLAPPING THE ELEVATOR). FINISH SAND THE MODEL AND PREPARE FOR COVERING. COVER THE MODEL WITH LOW TEMPERATURE FILM. COVER THE ALL OF THE PARTS SEPARATELY BEFORE ASSEMBLY. CUT AWAY A STRIP OF FILM WHERE THERE IS TO BE A GLUE JOINT. CUT OUT THE DECALS AND APPLY TO THE MODEL OVER SOAPY WATER OR SPRAY CLEANER. THIS ALLOWS POSITIONING THE DECALS AND REMOVING ANY TRAPPED AIR BUBBLES.

STEP SIX: USE THE POSITION OF THE RADIO TO BALANCE THE MODEL. BALANCE THE MODEL BY INSERTING A LOOP OF STRING AROUND THE WING MOUNT DOWEL WHEN INSTALLING THE TOP WING. THE MODEL SHOULD HANG LEVEL FROM THE STRING. THIS WILL BALANCE THE MODEL SLIGHTLY NOSE HEAVY. AFTER FLYING, MOVE THE BALANCE BACK UNTIL THE ELEVATOR IS NEUTRALIZED. MOUNT THE SERVOS AS SHOWN IN STEP SIX AFTER FINDING THEIR POSITION WHILE BALANCING THE MODEL. TO HOOK UP ALL FOUR AILERONS, MAKE THE LINKAGE AS SHOWN ON PLAN. INSTALL THE FOUR AILERON LINKAGE ABOUT 1/2" FROM EACH SIDE OF THE FUSELAGE. KEEP THE PUSHROD IN LINE WITH THE TRAILING EDGE OF BOTH TOP AND BOTTOM AILERONS. USE SMALL CONTROL HORNS AND CUT OFF AS SHOWN.

ENGINE AND FLYING: THE SIMPLE STAGGERWING WAS DESIGNED FOR .10 SIZED ENGINES. THE OS .10 GIVES OUTSTANDING PERFORMANCE WITH A 7 X 4 PROP AT ALTITUDES BELOW 2500 FEET. AT ALTITUDES ABOVE 2500 FEET CONSIDER A .15. TAKE OFF FROM A SMOOTH SURFACE, GET SOME ALTITUDE, TRIM IT OUT THEN WRING IT OUT. THE SIMPLE STAGGERWING IS A BALL TO FLY!

STEP FOUR

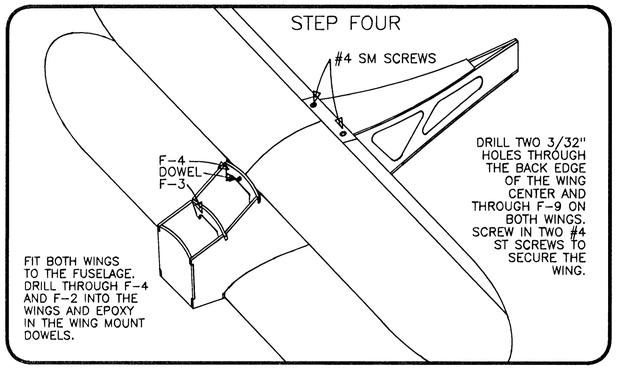

FIT BOTH WINGS TO THE FUSELAGE. DRILL THROUGH F-4 AND F-2 INTO THE WINGS AND EPOXY IN THE WING MOUNT DOWELS.

DRILL TWO 3/32" HOLES THROUGH THE BACK EDGE OF THE WING CENTER AND THROUGH F-9 ON BOTH WINGS. SCREW IN TWO #4 ST SCREWS TO SECURE THE WING.

STEP FIVE

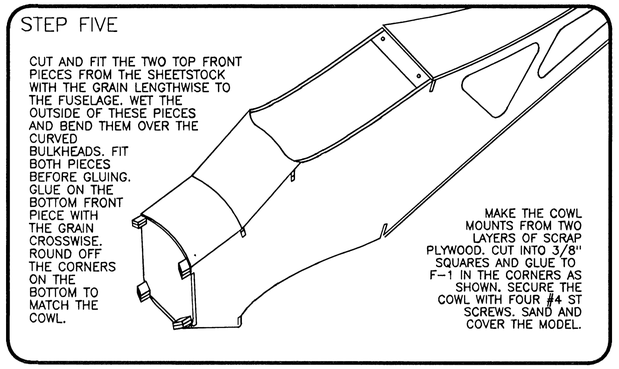

CUT AND FIT THE TWO TOP FRONT PIECES FROM THE SHEETSTOCK WITH THE GRAIN LENGTHWISE TO THE FUSELAGE. WET THE OUTSIDE OF THESE PIECES AND BEND THEM OVER THE CURVED BULKHEADS. FIT BOTH PIECES BEFORE GLUING. GLUE ON THE BOTTOM FRONT PIECE WITH THE GRAIN CROSSWISE. ROUND OFF THE CORNERS ON THE BOTTOM TO MATCH THE COWL.

MAKE THE COWL MOUNTS FROM TWO LAYERS OF SCRAP PLYWOOD. CUT INTO 3/8" SQUARES AND GLUE TO F-1 IN THE CORNERS AS SHOWN. SECURE THE COWL WITH FOUR #4 ST SCREWS. SAND AND COVER THE MODEL.

STEP SIX

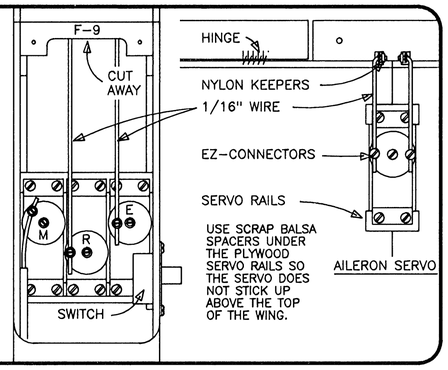

IF STANDARD SERVOS ARE USED AS SHOWN, CUT AWAY THE SECTION OF F-8 BETWEEN THE SERVO RAILS. USE ACE "NO NOISE" FLEX THROTTLE FOR THE THROTTLE LINKAGE. EZ-CONNECTORS ARE USED TO CONNECT THE PUSHRODS TO THE SERVOS.

CUT AWAY F-9 TO CLEAR THE AILERON LINKAGE.

WRAP THE RECEIVER AND BATTERY IN FOAM RUBBER AND PLACE AHEAD OF THE SERVOS.

USE SCRAP BALSA SPACERS UNDER THE PLYWOOD SERVO RAILS SO THE SERVO DOES NOT STICK UP ABOVE THE TOP OF THE WING.

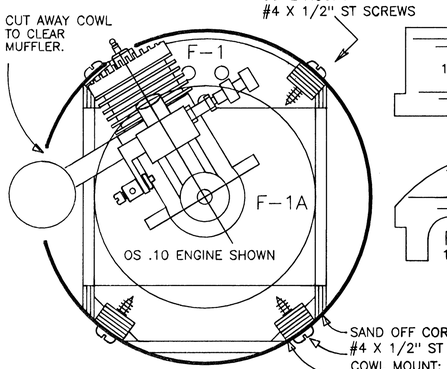

MOUNT THE ENGINE SO THAT THE MUFFLER CLEARS THE FUSELAGE SIDE.

ENGINE: .09 TO .15 USE MOUNT TO FIT ENGINE.

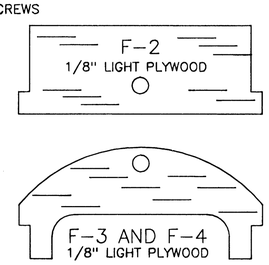

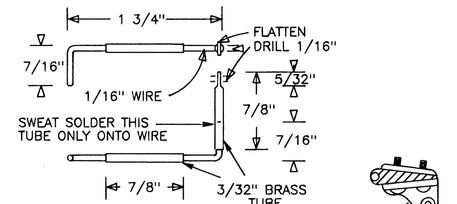

AILERON LINKAGE

MAKE ONE RIGHT AND ONE LEFT

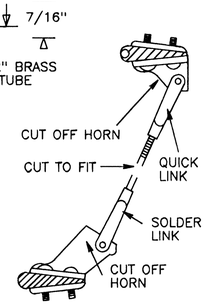

DUAL AILERON LINKAGE
(NOT SUPPLIED)

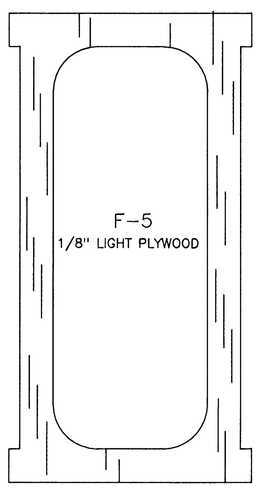

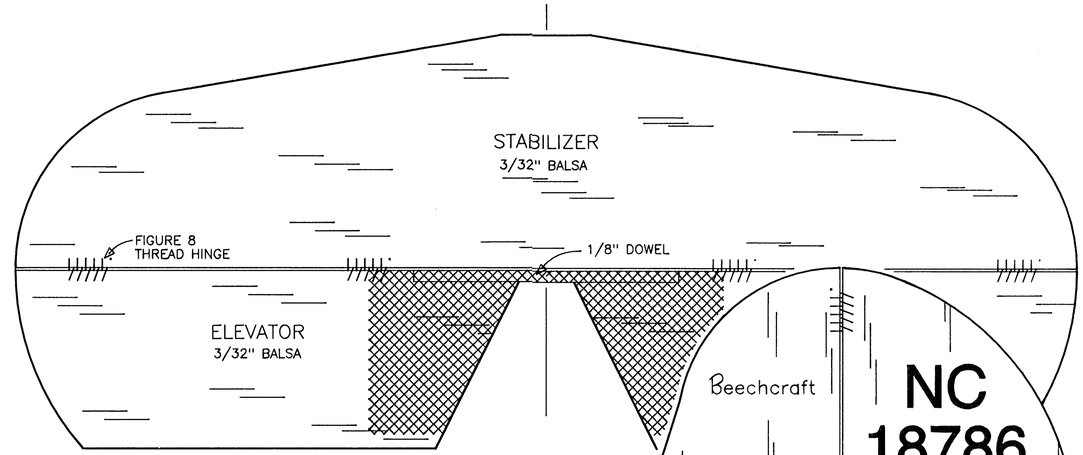

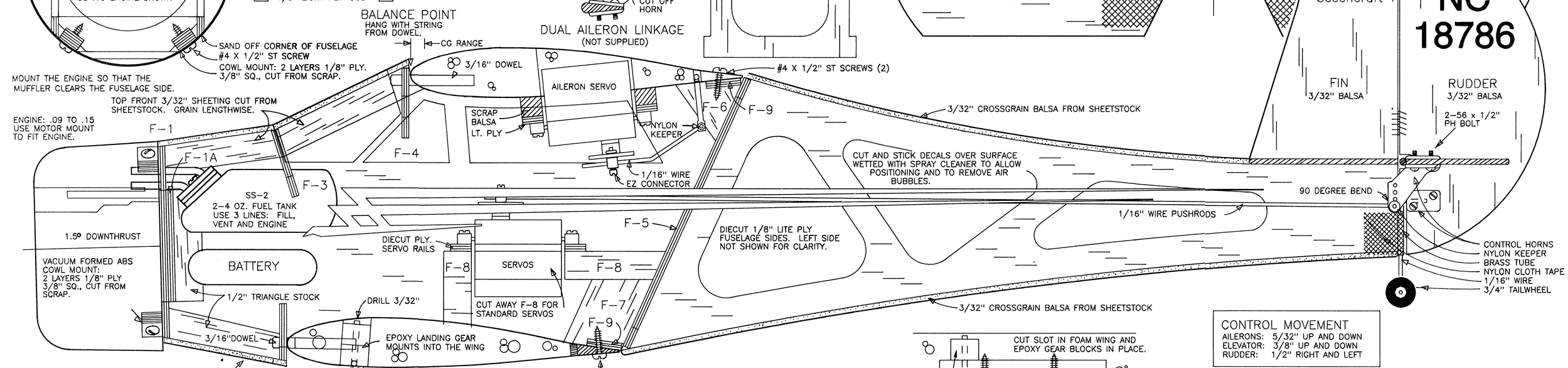

CONTROL MOVEMENT
AILERONS: 5/32" UP AND DOWN
ELEVATOR: 3/8" UP AND DOWN
RUDDER: 1/2" RIGHT AND LEFT

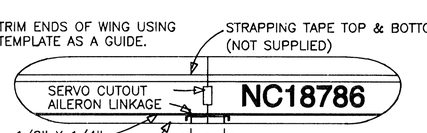

TOP WING DETAIL

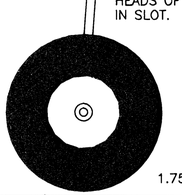

1.75" WHEELS

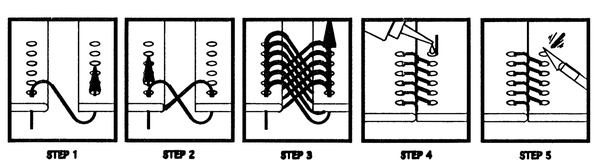

FIGURE 8 HINGE TECHNIQUE

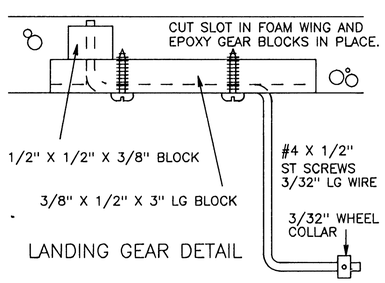

LANDING GEAR DETAIL

STAGGERWING BEECH 17

WING SPAN: 35"
WING AREA: 400 SQ IN
LENGHT: 28"
WEIGHT: 28 - 32 OZ
ENGINE: .09 - .15
RADIO: 3-4 CHANNEL

DESIGNED AND DRAWN BY FRED REESE

© 1993 ACE R/C, INC.

ACE R/C, INC.
116 W 19 ST, POB472, HIGGINSVILLE, MO 64037-0472

Staggerwing Wing Tip Template

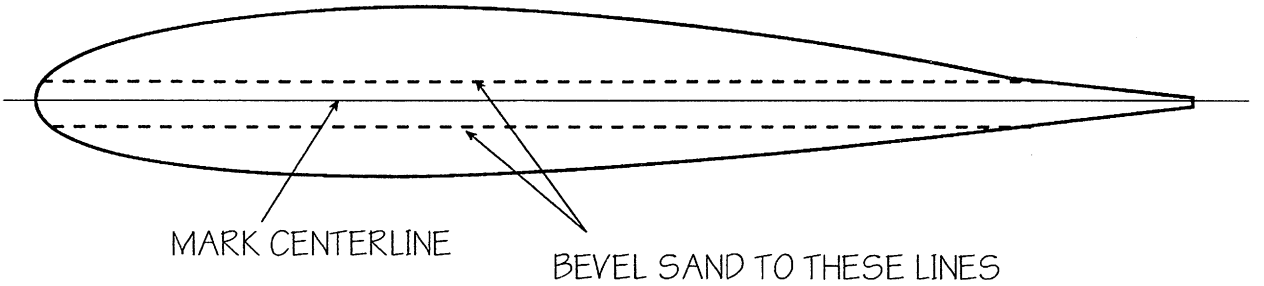

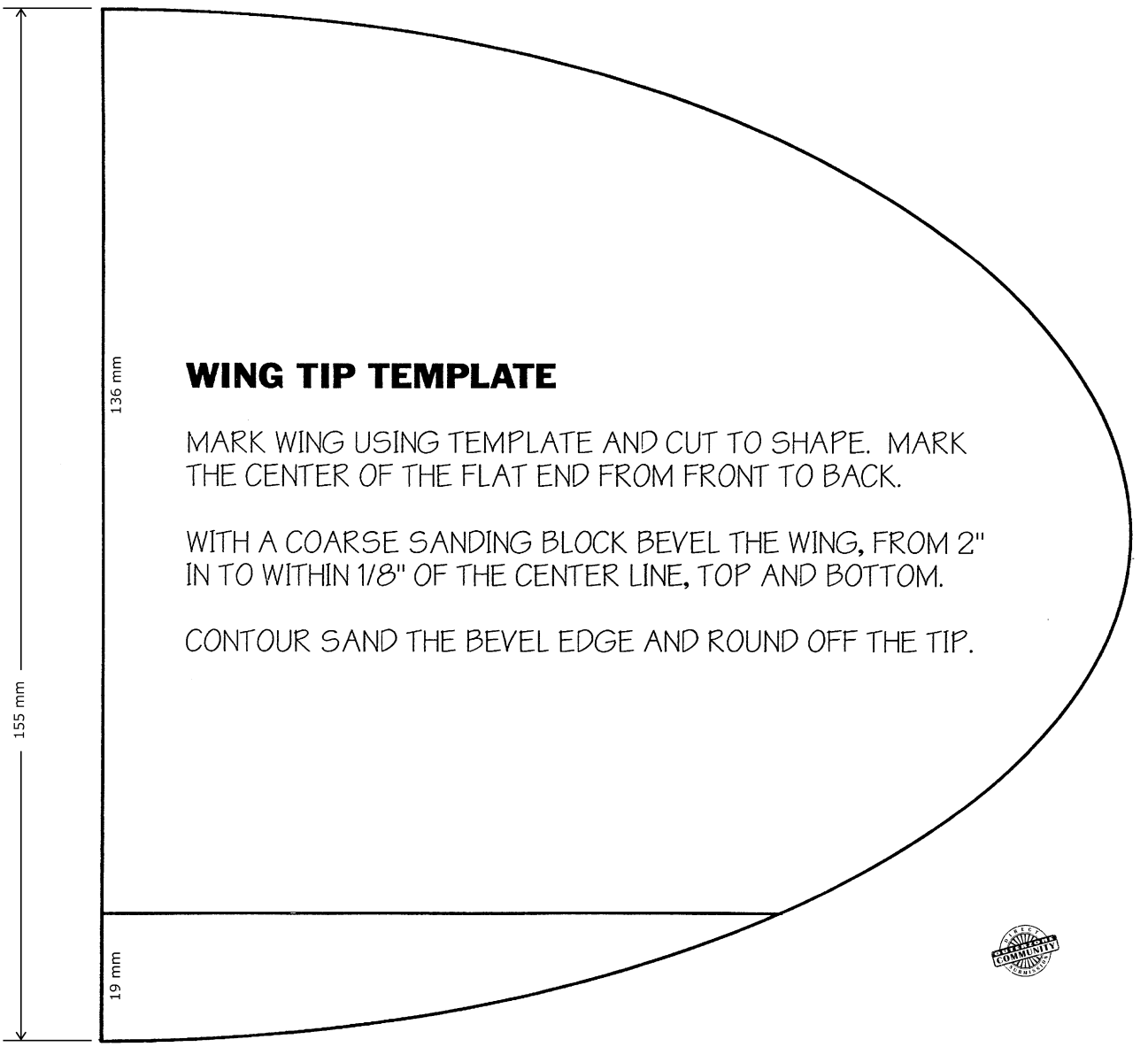

WING TIP TEMPLATE

MARK WING USING TEMPLATE AND CUT TO SHAPE. MARK THE CENTER OF THE FLAT END FROM FRONT TO BACK.

WITH A COARSE SANDING BLOCK BEVEL THE WING, FROM 2" IN TO WITHIN 1/8" OF THE CENTER LINE, TOP AND BOTTOM.

CONTOUR SAND THE BEVEL EDGE AND ROUND OFF THE TIP.