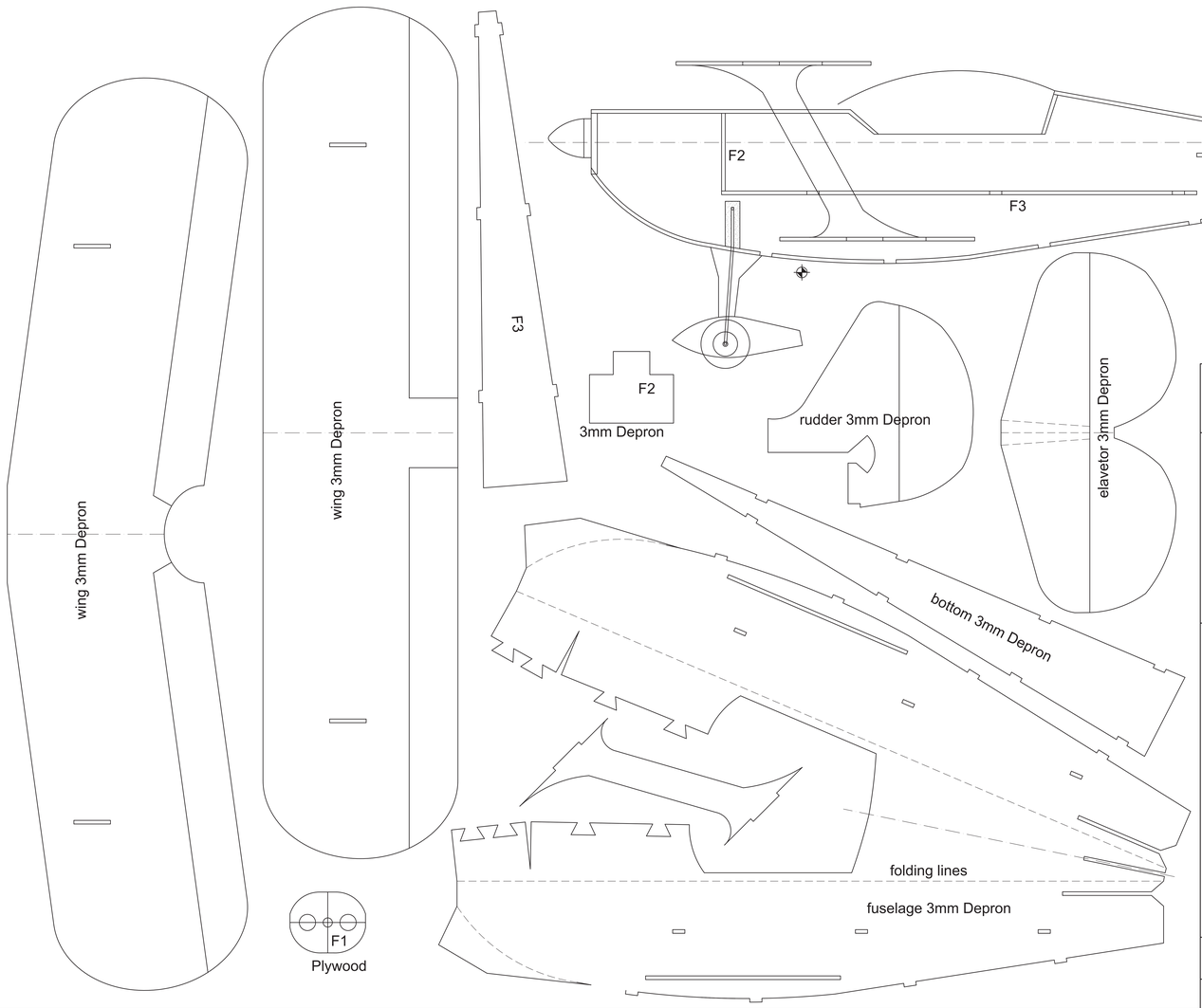

Motor mounting

When useing a brushless motor be sure to glue the plywood bracket firmly. The thrust can be enormous (600-800 grams) and can pull out the bracket if not firmly attacht.

Rudder attachment

You can use clear packing tape for connecting the rudders. Use these steps for a strong attachment.

Building tips

After cutting the pieces out of Depron, you can use a Steadler or Edding waterproof pen for a collerfull deceration

Before bending the round curves first tape the outside with clear packing tape. Bend the piece over a round object such as a table edge. After glueing and drying remove the tape for weight reduction.

For 3D flying is a Brushless motor and LIPO battery the best choice.

Let me now how your airoplane performs on:
Visit me on www.geocities.com/rc_pittsspecial
Have lots of fun with this little Depron Airplane!

OvdP productions

Designer: Olaf van der Plaats
Date: 30 june 2004
Scale 1:1
Version V1.0

Semi **Christen Eagle**
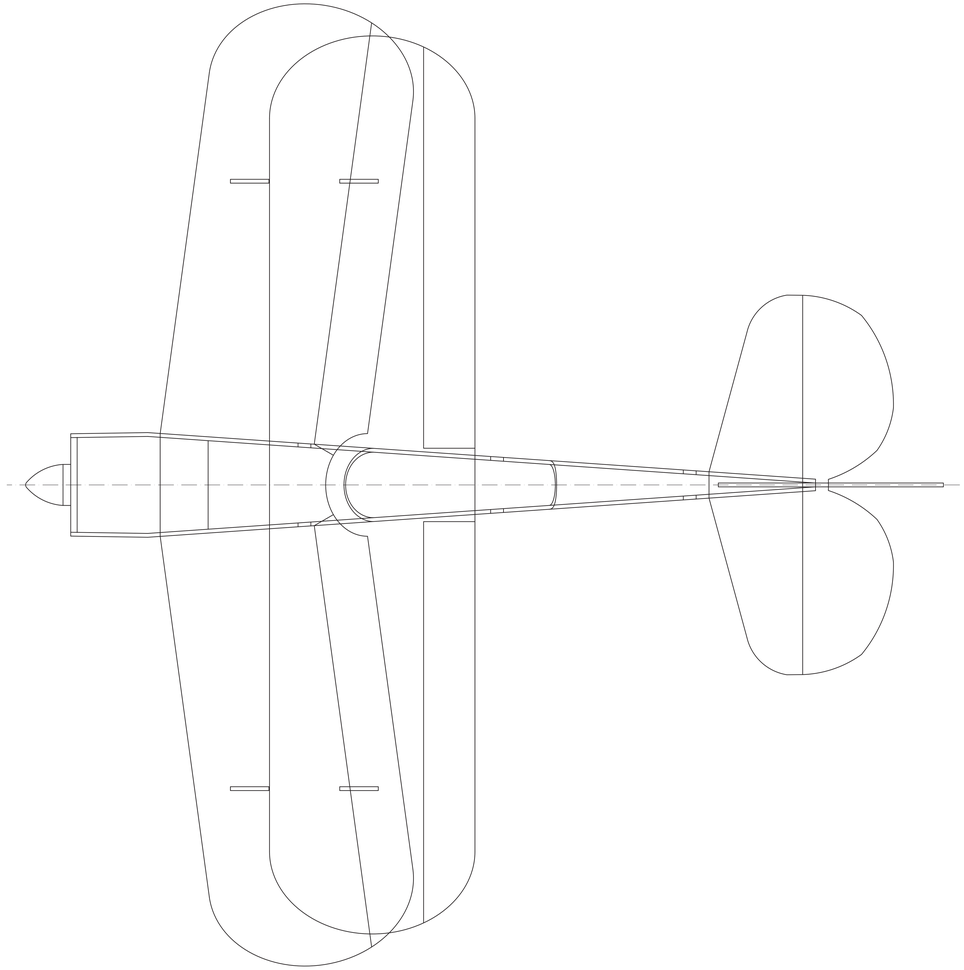
Wingspan:	750 mm
Length:	680 mm
Wingarea:	23 dm2
Max. weight:	300 g
Wingload:	13 g/dm2