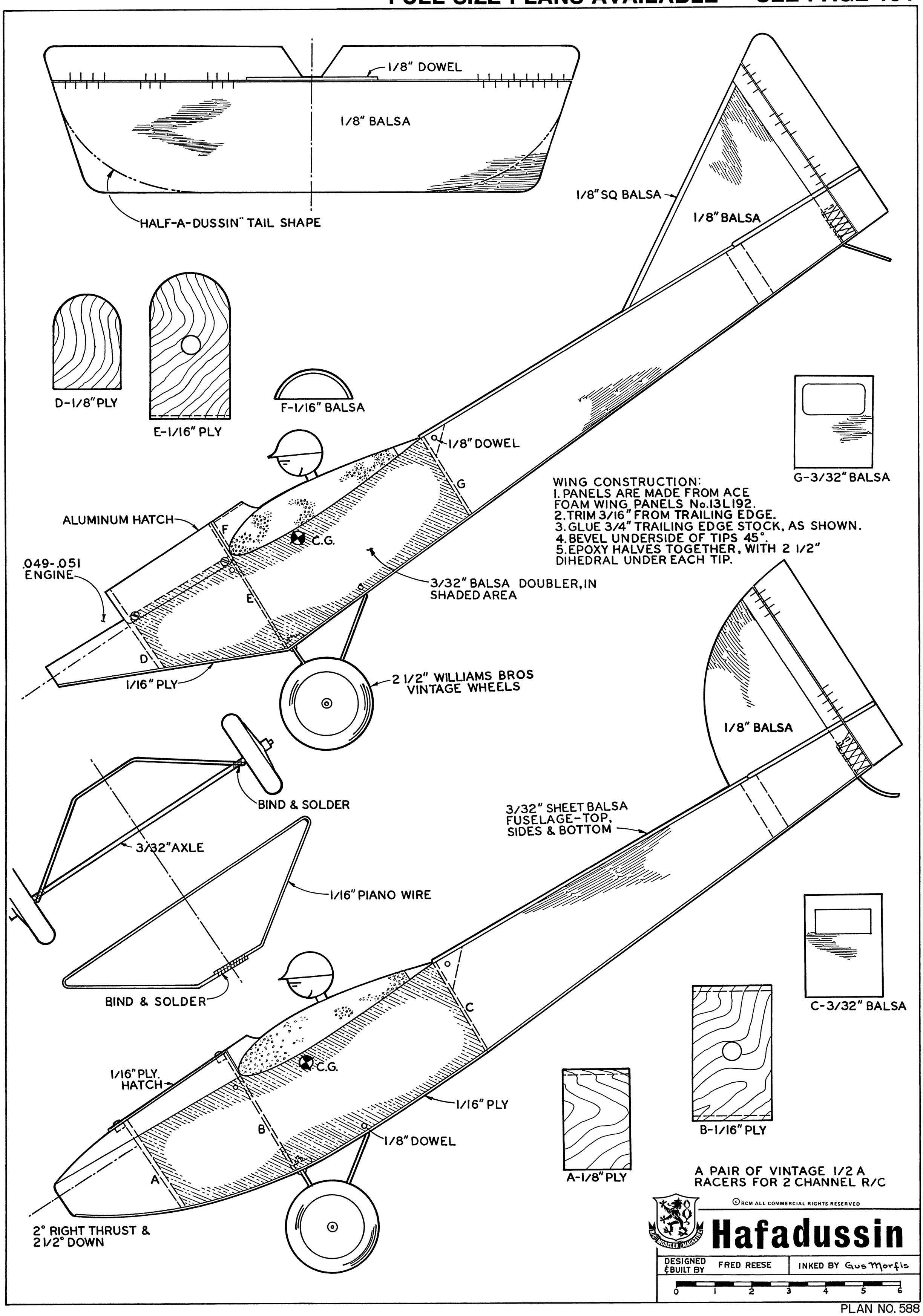
1/8" DOWEL
1/8" BALSA
HALF-A-DUSSIN" TAIL SHAPE
1/8" SQ BALSA
1/8" BALSA
D-1/8" PLY
E-1/16" PLY
F-1/16" BALSA
G-3/32" BALSA
1/8" DOWEL
G
WING CONSTRUCTION:
1. PANELS ARE MADE FROM ACE FOAM WING PANELS No.13L192.
2. TRIM 3/16" FROM TRAILING EDGE.
3. GLUE 3/4" TRAILING EDGE STOCK, AS SHOWN.
4. BEVEL UNDERSIDE OF TIPS 45°.
5. EPOXY HALVES TOGETHER, WITH 2 1/2" DIHEDRAL UNDER EACH TIP.
ALUMINUM HATCH
F
C.G.
.049-.051 ENGINE
E
3/32" BALSA DOUBLER, IN SHADED AREA
D
1/16" PLY
2 1/2" WILLIAMS BROS VINTAGE WHEELS
1/8" BALSA
BIND & SOLDER
3/32" SHEET BALSA FUSELAGE-TOP, SIDES & BOTTOM
3/32" AXLE
1/16" PIANO WIRE
C-3/32" BALSA
BIND & SOLDER
C
C.G.
1/16" PLY. HATCH
1/16" PLY
B
1/8" DOWEL
A
B-1/16" PLY
A-1/8" PLY
2° RIGHT THRUST & 2 1/2° DOWN
A PAIR OF VINTAGE 1/2 A RACERS FOR 2 CHANNEL R/C
© RCM ALL COMMERCIAL RIGHTS RESERVED
RC MODELER MAGAZINE
Hafadussin
DESIGNED & BUILT BY FRED REESE
INKED BY Gus Morfis
0 1 2 3 4 5 6
PLAN NO. 588