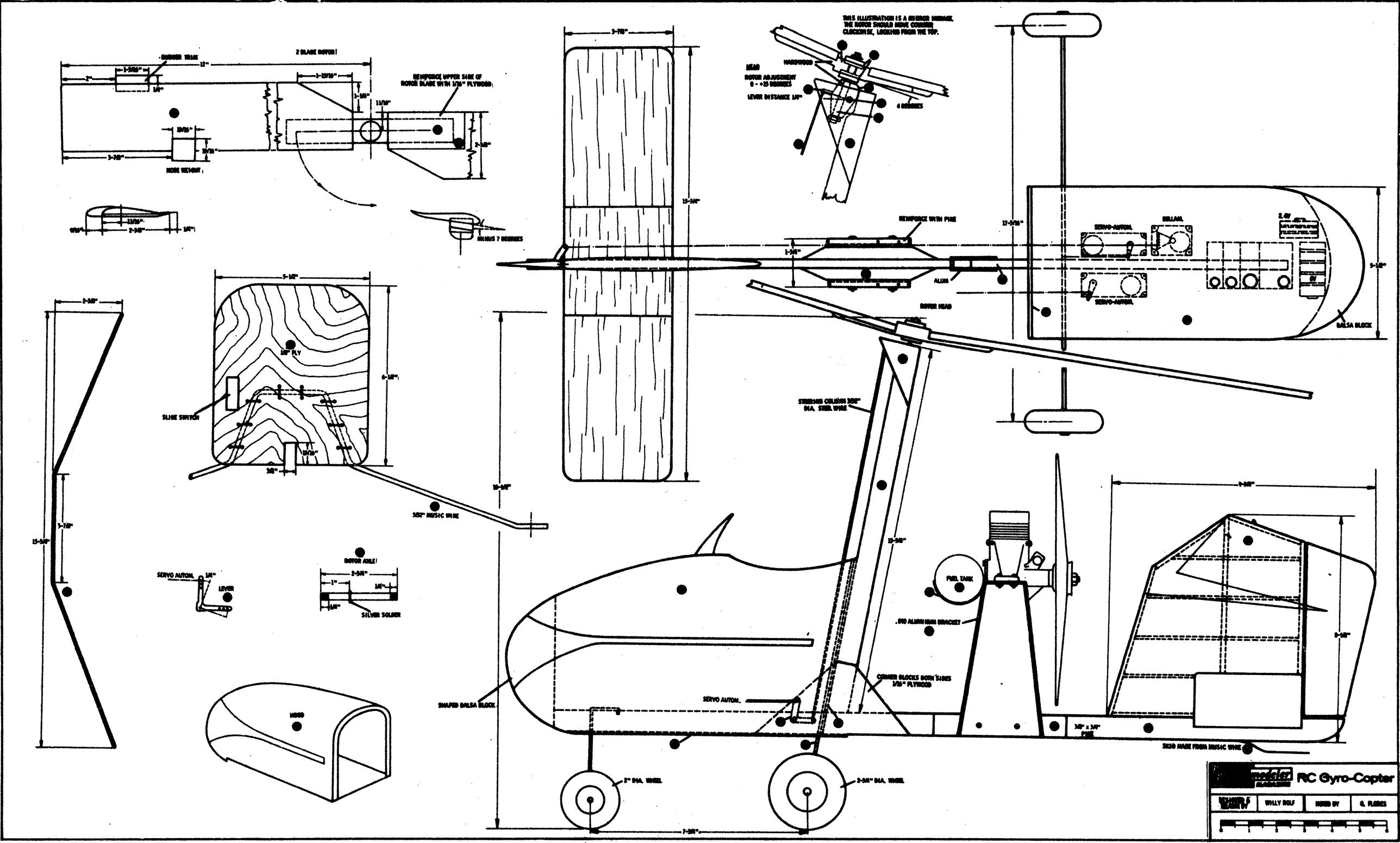
2 BLADE ROTOR
RUBBER TRIM
12"
2"
1-3/16"
1/4"
1-13/16"
1-1/8"
11/16"
REINFORCE UPPER SIDE OF ROTOR BLADE WITH 1/16" PLYWOOD
2-1/8"
15/16"
15/16"
3-7/8"
NOSE WEIGHT
13/16"
2-1/8"
1/4"
MINUS 7 DEGREES
3-7/8"
15-3/4"
5-1/2"
6-1/2"
1/8" PLY
SLIDE SWITCH
10/16"
3/8"
.062" MUSIC WIRE
ROTOR AXLE
2-3/4"
1"
1/4"
1/4"
SILVER SOLDER
SERVO AUTOM.
1/4"
LEVER
HOOD
3-7/8"
15-3/4"
15-3/4"
7-3/8"
SHAPED BALSA BLOCK
2" DIA. WHEEL
2-3/4" DIA. WHEEL
THIS ILLUSTRATION IS A MIRROR IMAGE. THE ROTOR SHOULD MOVE COUNTER CLOCKWISE, LOOKING FROM THE TOP.
HEAD
HARDWOOD
ROTOR ADJUSTMENT 0 - +15 DEGREES
LEVER DISTANCE 1/4"
4 SCREWS
REINFORCE WITH PINE
1-3/4"
ALUM.
ROTOR HEAD
STEERING COLLOIN .020" DIA. STEEL WIRE
17-3/16"
SERVO-AUTOM.
BELLAN.
2.6V
SERVO-AUTOM.
5-1/8"
BALSA BLOCK
FUEL TANK
.010 ALUMINUM BRACKET
CORNER BLOCKS BOTH SIDES 1/16" PLYWOOD
SERVO AUTOM.
3/8" x 3/8" PINE
9-3/8"
8-3/8"
.020 MADE FROM MUSIC WIRE
model air
RC Gyro-Copter
WILLY BOLF
GL FLORES