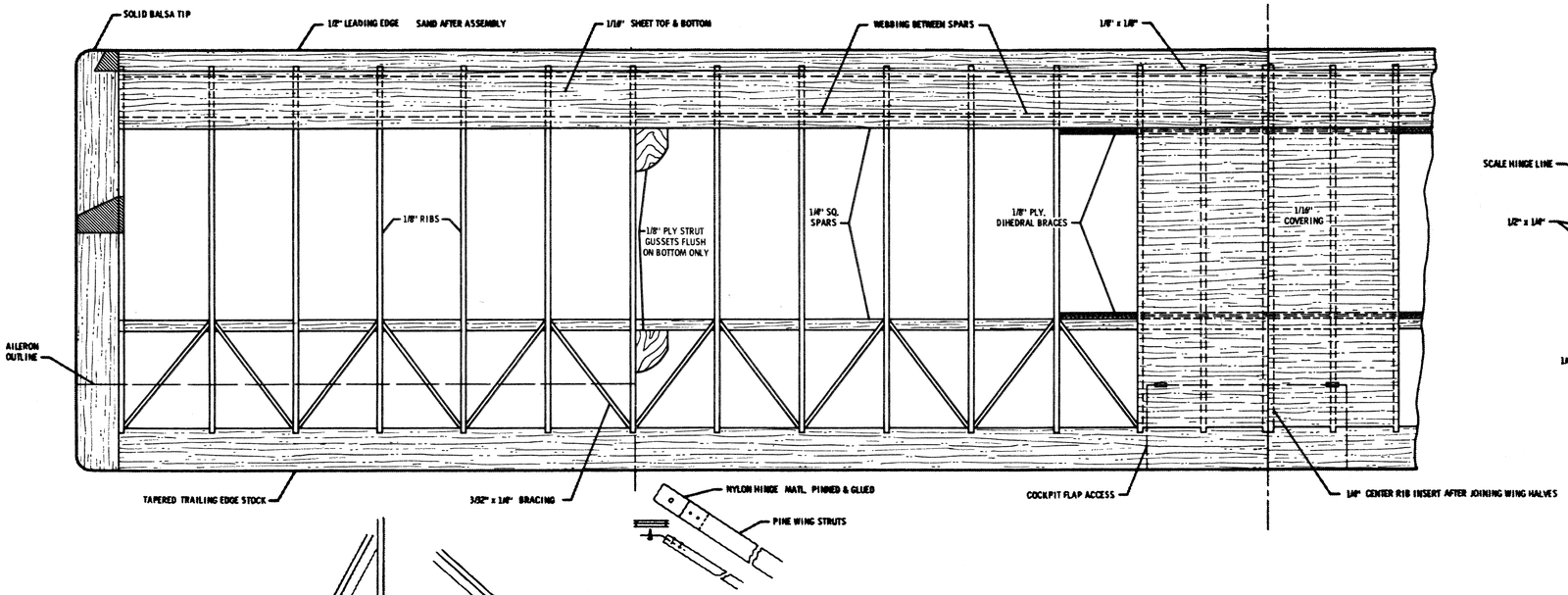

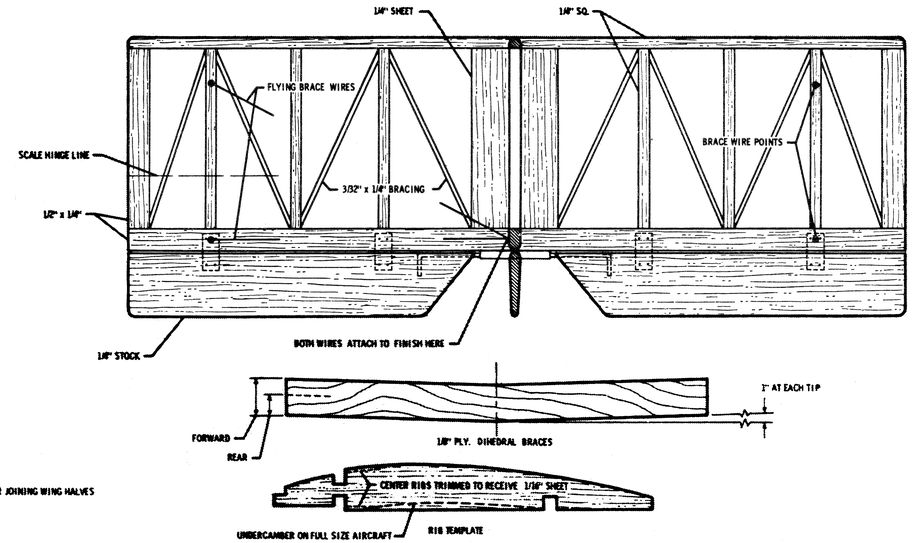

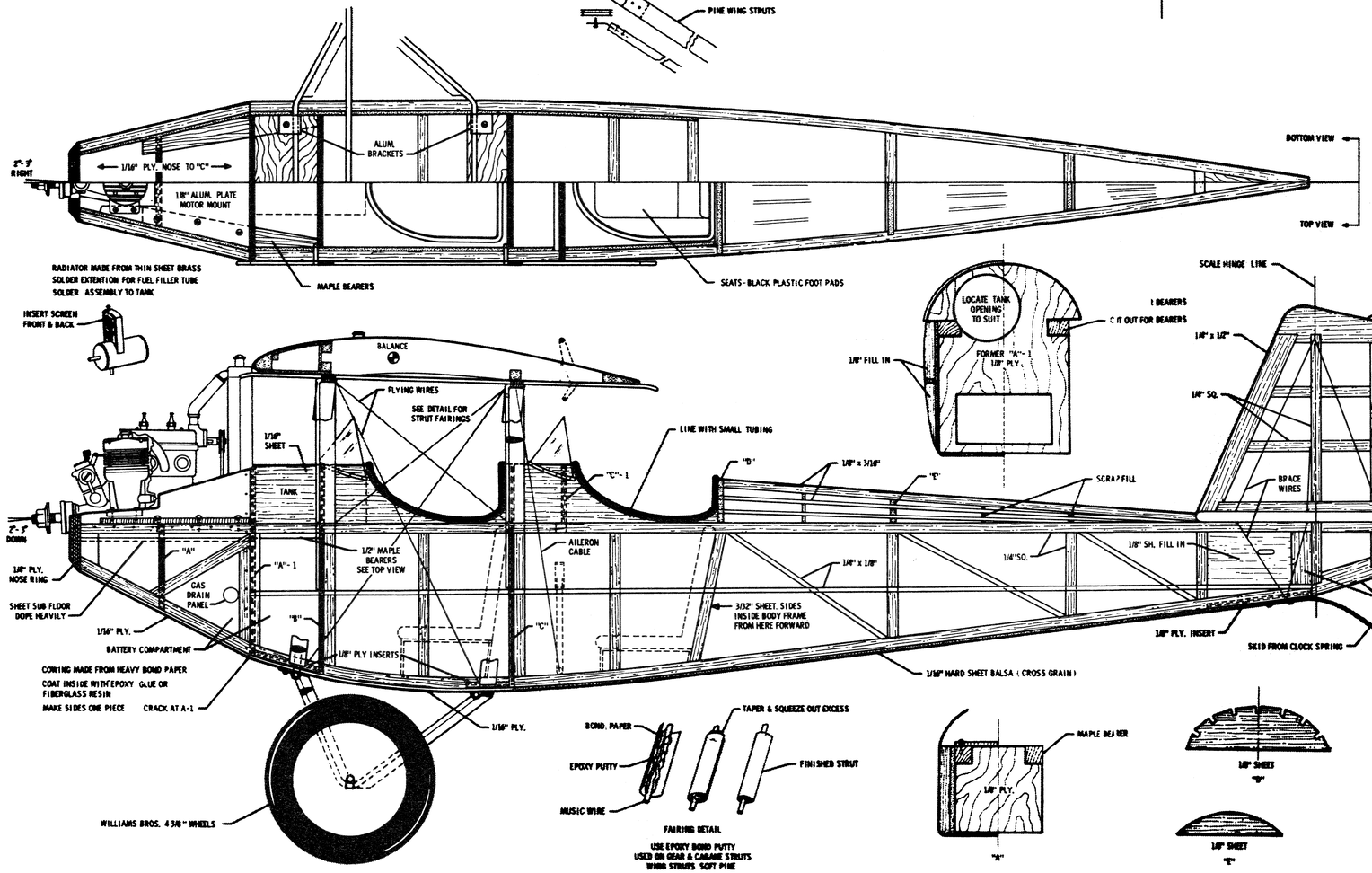

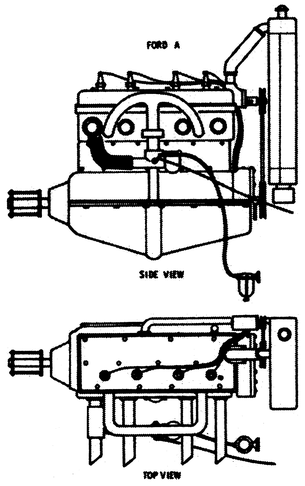

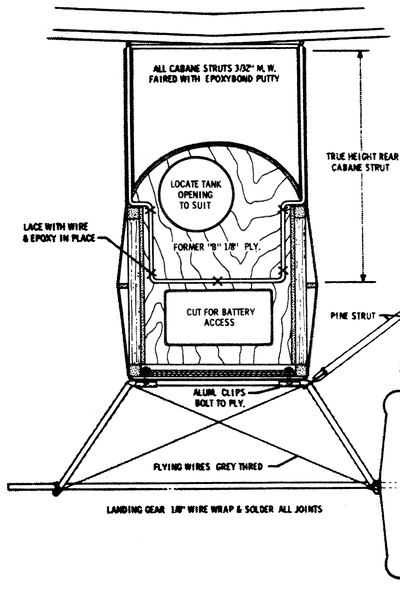

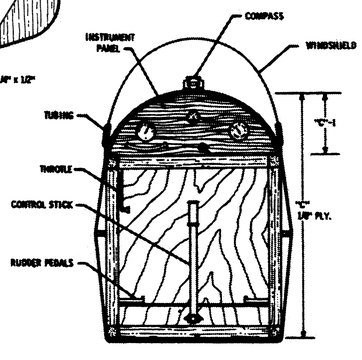

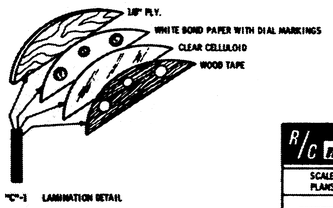

"C"-1 LAMINATION DETAIL

R/C modeler

PIETENPOL 'AIR-CAMPER'

SCALED FROM FACTORY PLANS BY FRED ANGEL	INKED BY	BOB HAUSER

0 1 2 3 4 5 6