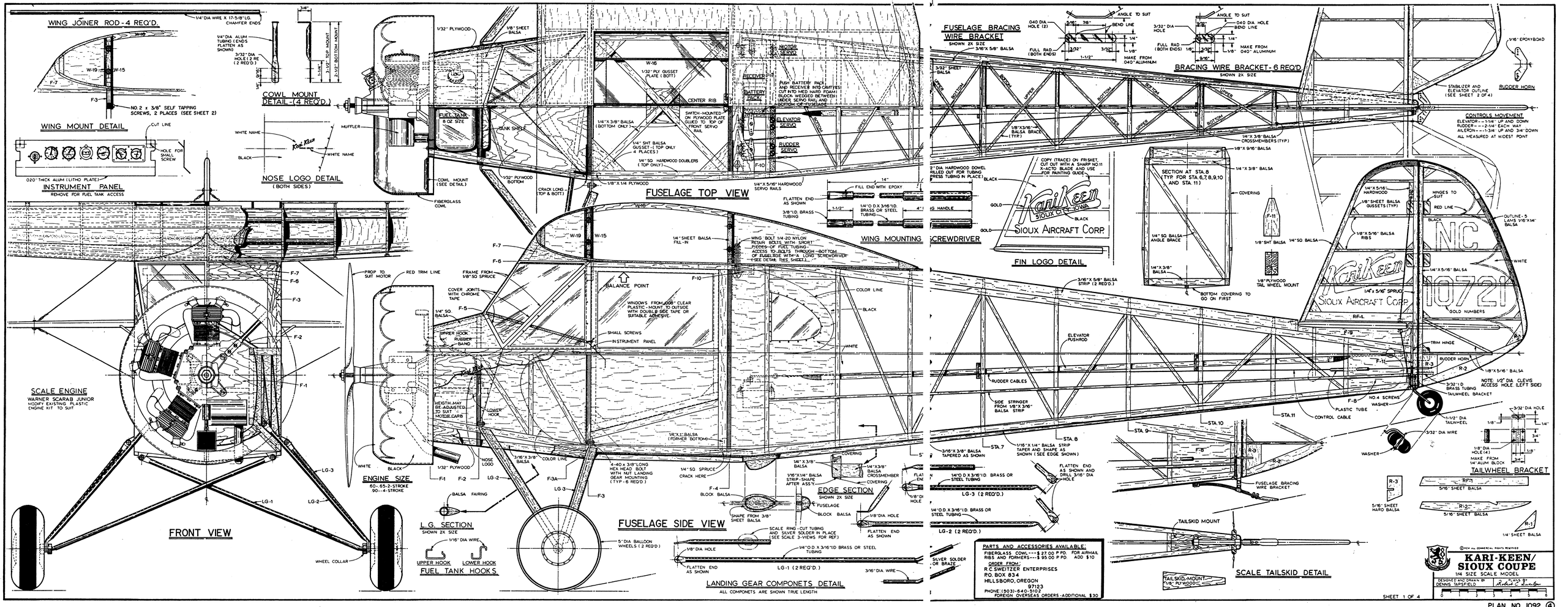
WING JOINER ROD - 4 REQ'D.
1/4" DIA WIRE X 17-5/8" LG. CHAMFER ENDS
1/4" DIA ALUM TUBING (END'S FLATTEN AS SHOWN)
3/32" DIA HOLE (2 REQ'D.)
NO. 2 x 3/8" SELF TAPPING SCREWS, 2 PLACES (SEE SHEET 2)
WING MOUNT DETAIL
COWL MOUNT DETAIL - (4 REQ'D.)
3-1/2" TOP MOUNT
2-1/2" BOTTOM MOUNT
CUT LINE
HOLE FOR SMALL SCREW
.020" THICK ALUM (LITHO PLATE)
INSTRUMENT PANEL
REMOVE FOR FUEL TANK ACCESS
WHITE NAME
BLACK
MUFFLER
NOSE LOGO DETAIL
(BOTH SIDES)
COWL MOUNT (SEE DETAIL)
FIBERGLASS COWL
1/32" PLYWOOD
1/8" SHEET BALSA
FUEL TANK 8 OZ SIZE
TANK SHELF
1/32" PLYWOOD BOTTOM
CRACK LONG. (TOP & BOTT)
1/4" X 3/8" BALSA (BOTTOM ONLY)
1/4" SHT BALSA GUSSET - (TOP ONLY 4 PLACES)
1/4" SQ. HARDWOOD DOUBLERS (TOP ONLY)
1/8" X 1/4 PLYWOOD
1/32" PLY GUSSET PLATE (BOTT)
CENTER RIB
SWITCH - MOUNTED ON PLYWOOD PLATE GLUED TO TOP OF FRONT SERVO RAIL
RECEIVER
BATTERY PACK
MOTOR SERVO
PUSH BATTERY PACK AND RECEIVER INTO CAVITIES CUT INTO MED HARD FOAM BLOCK WEDGED BETWEEN UNDER SERVO RAIL AND BOTTOM OF FUSELAGE
ELEVATOR SERVO
RUDDER SERVO
1/4" X 5/16" HARDWOOD SERVO RAILS
FUSELAGE TOP VIEW
FLATTEN END AS SHOWN
3/8" I.D. BRASS TUBING
1/4" O.D. X 3/16" I.D. BRASS OR STEEL TUBING
FILL END WITH EPOXY
WING MOUNTING
1/4" SHEET BALSA FILL-IN
WING BOLT 1/4-20 NYLON PLAIN BOLTS WITH SHORT PIECES OF FUEL TUBING - ACCESS TO BOLTS THROUGH BOTTOM OF FUSELAGE WITH A LONG SCREWDRIVER (SEE DETAIL THIS SHEET)
BALANCE POINT
WINDOWS FROM .008" CLEAR PLASTIC - MOUNT TO OUTSIDE WITH DOUBLE SIDE TAPE OR SUITABLE ADHESIVE.
SMALL SCREWS
INSTRUMENT PANEL
COLOR LINE
BLACK
WHITE
SCALE ENGINE
WARNER SCARAB JUNIOR
MODIFY EXISTING PLASTIC ENGINE KIT TO SUIT
PROP TO SUIT MOTOR
RED TRIM LINE
FRAME FROM 1/8" SQ SPRUCE
COVER JOINTS WITH CHROME TAPE
1/4" SQ BALSA
UPPER HOOK RUBBER BAND
HEIGTH MAY BE ADJUSTED TO SUIT MOTOR CARB
LOWER HOOK
1/8" X 1" BALSA (FORWER BOTTOM)
ENGINE SIZE
60 - 65 - 2-STROKE
90 - 4-STROKE
FRONT VIEW
LG-1
LG-2
LG-3
WHEEL COLLAR
BALSA FAIRING
L.G. SECTION
SHOWN 2X SIZE
1/16" DIA WIRE
UPPER HOOK
LOWER HOOK
FUEL TANK HOOKS
4-40 x 3/8" LONG HEX HEAD BOLT WITH NUT LANDING GEAR MOUNTING (TYP - 6 REQ'D.)
1/4" SQ SPRUCE CRACK HERE
F-4 BLOCK BALSA
SHAPE FROM 3/8" SHEET BALSA
FUSELAGE SIDE VIEW
5" DIA BALLOON WHEELS (2 REQ'D.)
1/8" DIA HOLE
FLATTEN END AS SHOWN
SCALE RING - CUT TUBING AND SILVER SOLDER IN PLACE (SEE SCALE 3-VIEWS FOR REF.)
1/4" O.D. X 3/16" I.D. BRASS OR STEEL TUBING
LG-1 (2 REQ'D.)
3/16" DIA. WIRE
LANDING GEAR COMPONETS DETAIL
ALL COMPONETS ARE SHOWN TRUE LENGTH
EDGE SECTION
SHOWN 2X SIZE
1/4" X 3/8" BALSA
1/16" X 3/8" BALSA STRIP - SHAPE AFTER ASS'Y
COVERING
1/4" X 3/8" BALSA CROSSMEMBER
FUSELAGE
BLOCK BALSA
1/8" DIA. HOLE
FLATTEN END AS SHOWN
FUSELAGE BRACING WIRE BRACKET
SHOWN 2X SIZE
3/16" X 5/8" BALSA
3/32" SHEET BALSA
.040 DIA. HOLE (2)
BEND LINE
FULL RAD. (BOTH ENDS)
MAKE FROM .040" ALUMINUM
3/32" DIA HOLE
ANGLE TO SUIT
.040 DIA. HOLE
BRACING WIRE BRACKET - 6 REQ'D.
1/8" X 3/16" BALSA BRACE (TYP.)
1/4" X 3/8" BALSA CROSSMEMBERS (TYP.)
1/8" X 9/16" BALSA
STABILIZER AND ELEVATOR OUTLINE (SEE SHEET 2 OF 4)
RUDDER HORN
1/16" EPOXYBOAD
CONTROLS MOVEMENT
ELEVATOR = = 1-1/4" UP AND DOWN
RUDDER = = 2-1/4" EACH WAY
AILERON = = 1-3/4" UP AND 3/4" DOWN
ALL MEASURED AT WIDEST POINT
2" DIA. HARDWOOD DOWEL RILLED OUT FOR TUBING (PRESS TUBING IN PLACE)
SCREWDRIVER
COPY (TRACE) ON FRISKET, CUT OUT WITH A SHARP NO.11 X-ACTO BLADE AND USE FOR PAINTING GUIDE
KariKeen
SIOUX CITY, IOWA
SIOUX AIRCRAFT CORP.
FIN LOGO DETAIL
SECTION AT STA. 8 (TYP FOR STA. 6,7,8,9,10 AND STA. 11)
1/4" X 3/8" BALSA
COVERING
1/4" SQ BALSA ANGLE BRACE
1/4" X 3/8" BALSA
BOTTOM COVERING TO GO ON FIRST
F-11
1/8" SHT BALSA
1/4" SQ BALSA
1/8" PLYWOOD TAIL WHEEL MOUNT
1/4" X 5/16" HARDWOOD
1/8" SHEET BALSA GUSSETS (TYP)
1/8" X 5/16" BALSA RIBS
HINGES TO SUIT
RED LINE
BLACK
OUTLINE - 5 LAMS 1/16" X 1/4" BALSA
NC
10721
GOLD NUMBERS
WHITE
1/4" X 5/16" BALSA
1/4" X 5/16" SPRUCE
RF-1
F-9
TRIM HINGE
F-11
R-3
R-2
1/8" X 5/16" BALSA
RUDDER HORN
3/32" I.D. BRASS TUBING
TAILWHEEL BRACKET
NOTE. 1/2" DIA CLEVIS ACCESS HOLE (LEFT SIDE)
NO. 4 SCREWS
WASHER
PLASTIC TUBE
CONTROL CABLE
1-1/2" DIA TAILWHEEL
3/32" DIA WIRE
3/32" DIA HOLE
1/8" DIA HOLE (4)
MAKE FROM 1/4" ALUM BLOCK
TAILWHEEL BRACKET
ELEVATOR PUSHROD
RUDDER CABLES
SIDE STRINGER FROM 1/8" X 3/8" BALSA STRIP
3/16" X 5/8" BALSA STRIP (2 REQ'D.)
1/16" X 1/4" BALSA STRIP TAPER AND SHAPE AS SHOWN (SEE EDGE SHOWN)
3/16" X 3/8" BALSA TAPERED AS SHOWN
STA. 7
STA. 8
STA. 9
STA. 10
STA. 11
FLATTEN END AS SHOWN AND DRILL 3/16" DIA HOLE
1/4" O.D. X 3/16" I.D. BRASS OR STEEL TUBING
LG-3 (2 REQ'D.)
LG-2 (2 REQ'D.)
SILVER SOLDER OR BRAZE
FUSELAGE BRACING WIRE BRACKET
R-3
5/16" SHEET HARD BALSA
RF-1
5/16" SHEET BALSA
R-2
5/16" SHEET BALSA
R-1
1/4" SHEET BALSA
TAILSKID MOUNT
TAILSKID MOUNT 1/16" PLYWOOD
SCALE TAILSKID DETAIL
PARTS AND ACCESSORIES AVAILABLE:
FIBERGLASS COWL --- $ 27.00 P PD. FOR AIRMAIL
RIBS AND FORMERS --- $ 95.00 P PD. ADD $10
ORDER FROM:
R.C. SWEITZER ENTERPRISES
P.O. BOX 834
HILLSBORO, OREGON
97123
PHONE: (503)-640-5102
FOREIGN OVERSEAS ORDERS - ADDITIONAL $30
© REW ALL COMMERCIAL RIGHTS RESERVED
KARI-KEEN/
SIOUX COUPE
1/4 SIZE SCALE MODEL
DESIGNED AND DRAWN BY
DENNIS TAPSFIELD
SHEET 1 OF 4
PLAN NO. 1092 ④

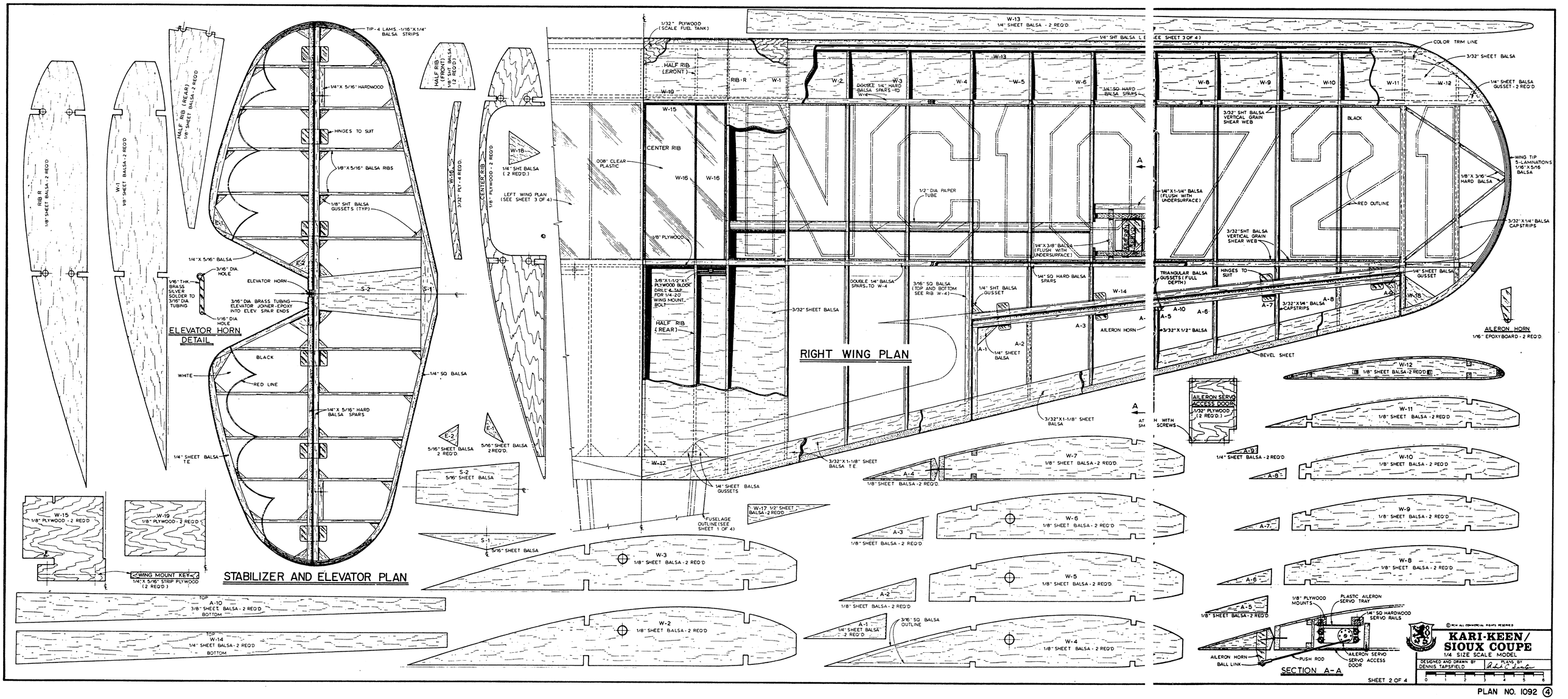
STABILIZER AND ELEVATOR PLAN
ELEVATOR HORN DETAIL
RIGHT WING PLAN
SECTION A-A
AILERON HORN
KARI-KEEN/
SIOUX COUPE
1/4 SIZE SCALE MODEL
DESIGNED AND DRAWN BY
DENNIS TAPSFIELD
PLANS BY
SHEET 2 OF 4
PLAN NO. 1092 4

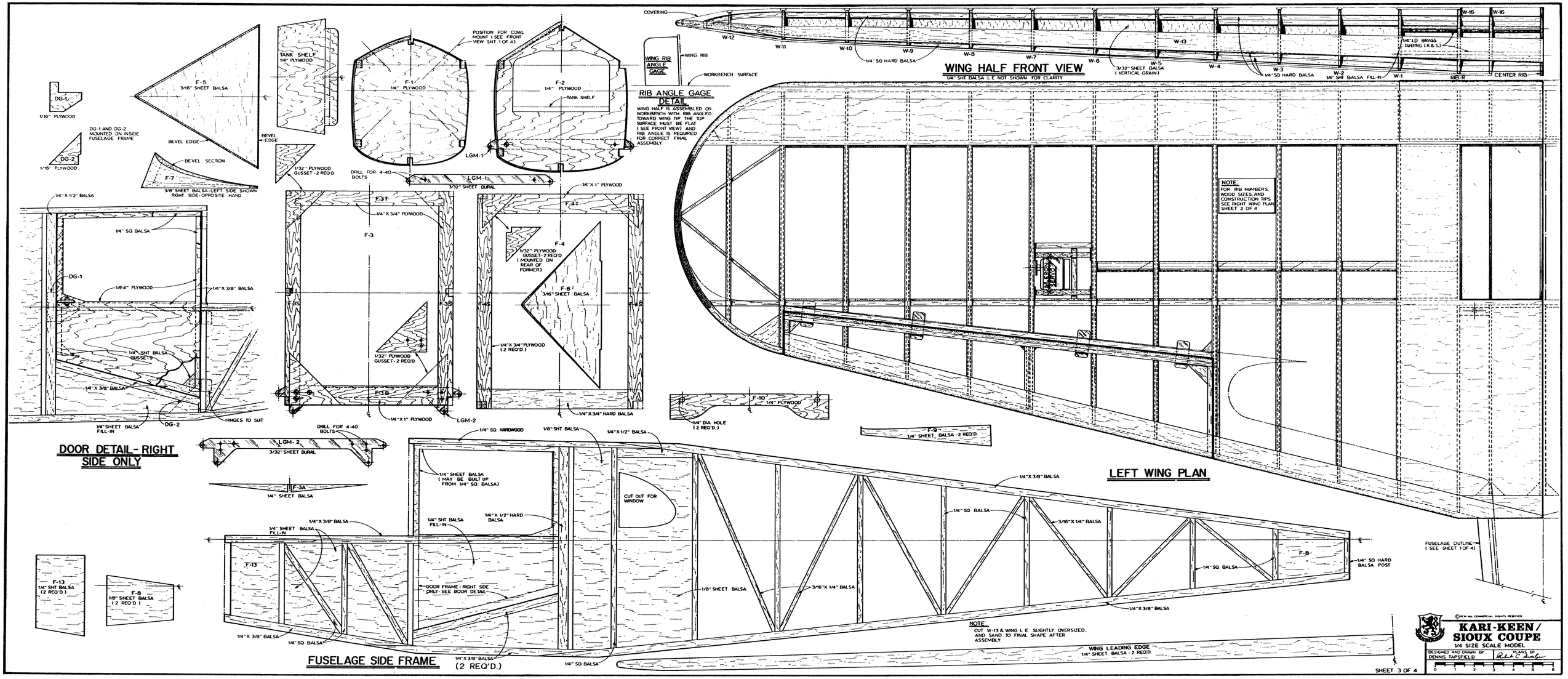

© KCM ALL COMMERCIAL RIGHTS RESERVED

STEP 1

CONSTRUCT TWO FUSELAGE SIDES OVER PLAN (SHEET 3 OF 4). MAKE A LEFT SIDE AND ONE RIGHT SIDE. LET SIDES DRY BEFORE STARTING STEP 2.

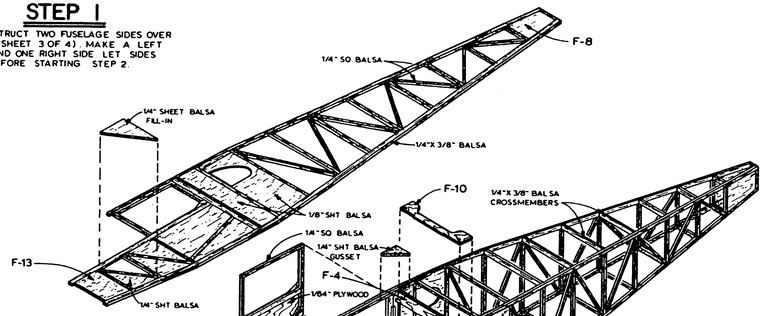

STEP 2

CRACK TOP AND BOTTOM LONGERONS AS SHOWN ON FUSELAGE SIDE VIEW (SHEET 1 OF 4). GLUE FORMERS F-3 AND F-4 IN PLACE AND LET DRY. ADD REMAINING FORMERS (F-1 AND F-2) AND THE 1/4"X 3/8" BALSA CROSSMEMBERS.

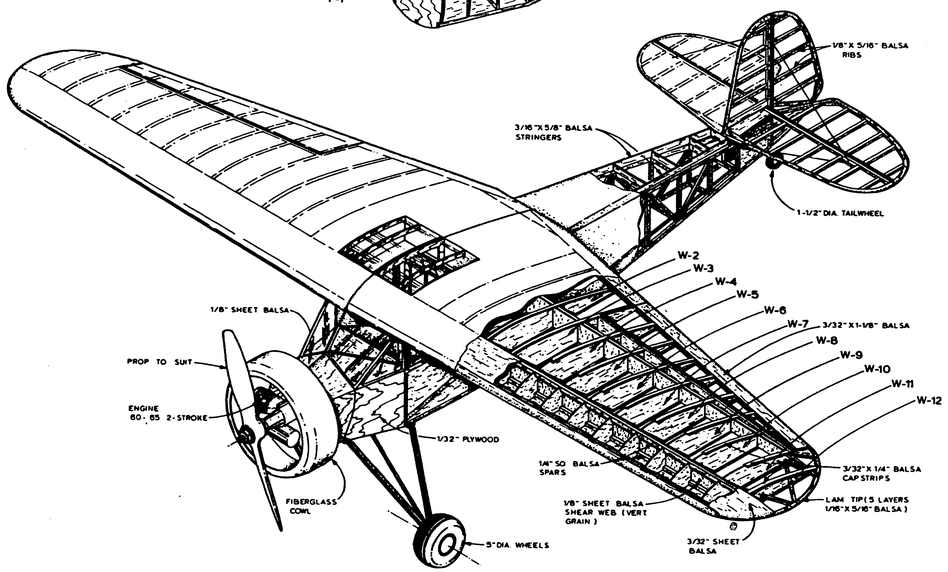

STEP 3

COMPLETE FUSELAGE - ADD TOP, BOTTOM, AND SIDE STRINGERS. COVER NOSE WITH PLYWOOD AND BALSA AS SHOWN. FINISH FUSELAGE ASSEMBLY. CONSTRUCT TAIL SURFACES AND WING HALVES AND COVER WITH MATERIAL TO SUIT. GLUE STAB AND FIN IN PLACE. INSTALL SERVOS AND LANDING GEAR. FINISH MODEL IN METHOD TO SUIT.

SHEET 4 OF 4

FUSELAGE SECTIONS

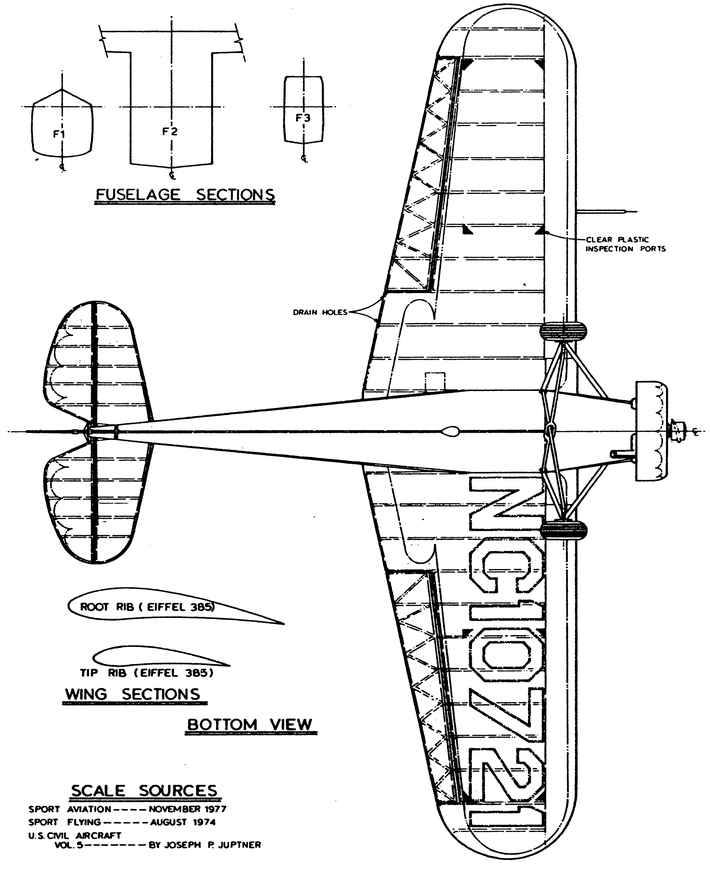

WING SECTIONS

BOTTOM VIEW

SCALE SOURCES

SPORT AVIATION - - - - NOVEMBER 1977
SPORT FLYING - - - - - AUGUST 1974
U.S. CIVIL AIRCRAFT VOL. 5 - - - - - - - BY JOSEPH P. JUPTNER

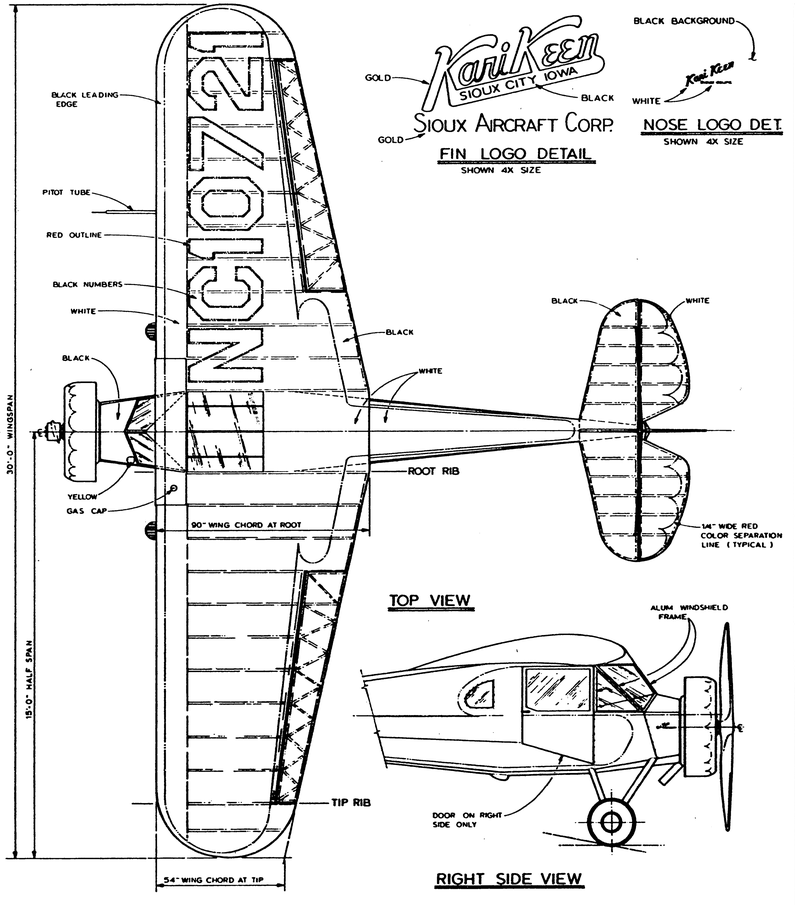

TOP VIEW

RIGHT SIDE VIEW

FIN LOGO DETAIL
SHOWN 4X SIZE

NOSE LOGO DET.
SHOWN 4X SIZE

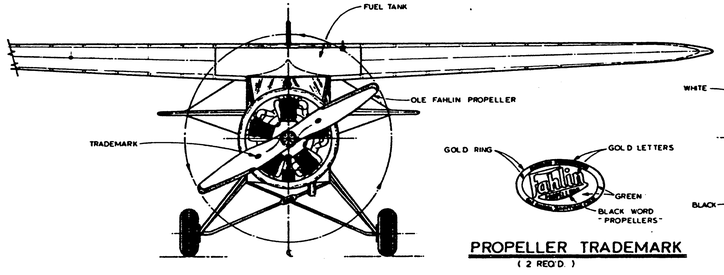

FRONT VIEW

PROPELLER TRADEMARK
(2 REQ'D)

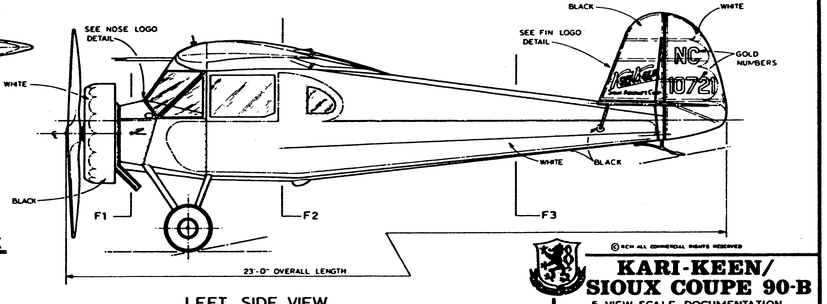

LEFT SIDE VIEW

SCALE: 3/4" = 1'-0"

© KCH ALL COMMERCIAL RIGHTS RESERVED

KARI-KEEN/ SIOUX COUPE 90-B

5-VIEW SCALE DOCUMENTATION

DRAWN BY ROBERT C SWEITZER
PLANS BY Robert C. Sweitzer

PLAN NO. 1092 (4)