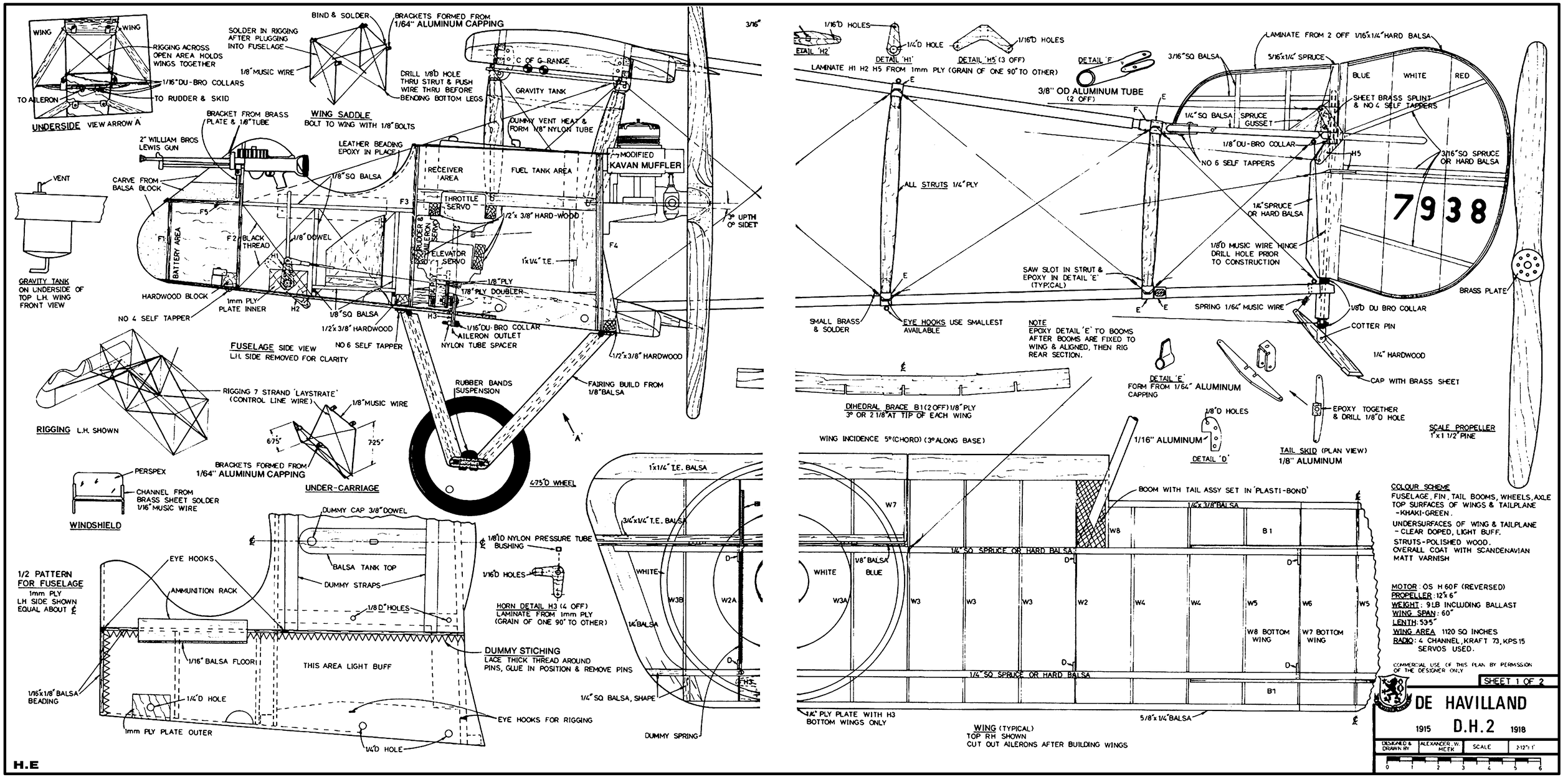
WING
WING
RIGGING ACROSS OPEN AREA HOLDS WINGS TOGETHER
1/16"DU-BRO COLLARS
TO AILERON
TO RUDDER & SKID
UNDERSIDE VIEW ARROW A
BIND & SOLDER
BRACKETS FORMED FROM 1/64" ALUMINUM CAPPING
SOLDER IN RIGGING AFTER PLUGGING INTO FUSELAGE
1/8" MUSIC WIRE
WING SADDLE
BOLT TO WING WITH 1/8" BOLTS
DRILL 1/8"D HOLE THRU STRUT & PUSH WIRE THRU BEFORE BENDING BOTTOM LEGS
3/16"
C OF G RANGE
GRAVITY TANK
DUMMY VENT HEAT & FORM 1/8" NYLON TUBE
BRACKET FROM BRASS PLATE & 1/8" TUBE
2" WILLIAM BROS LEWIS GUN
LEATHER BEADING EPOXY IN PLACE
MODIFIED KAVAN MUFFLER
RECEIVER AREA
FUEL TANK AREA
VENT
CARVE FROM BALSA BLOCK
1/8" SQ BALSA
THROTTLE SERVO
1/2"x 3/8" HARD-WOOD
3° UP TH
0° SIDE T
F1
F2
F3
F4
F5
BATTERY AREA
BLACK THREAD
1/8" DOWEL
RUDDER & AILERON SERVO
ELEVATOR SERVO
1"x1/4" T.E.
GRAVITY TANK ON UNDERSIDE OF TOP L.H. WING FRONT VIEW
HARDWOOD BLOCK
1mm PLY PLATE INNER
H1
H2
H3
1/8" PLY
1/8" PLY DOUBLER
NO 4 SELF TAPPER
1/8" SQ BALSA
1/2"x 3/8" HARDWOOD
1/16"DU-BRO COLLAR
AILERON OUTLET
NYLON TUBE SPACER
NO 6 SELF TAPPER
FUSELAGE SIDE VIEW
L.H. SIDE REMOVED FOR CLARITY
1/2"x 3/8" HARDWOOD
RUBBER BANDS SUSPENSION
FAIRING BUILD FROM 1/8" BALSA
A
RIGGING 7 STRAND 'LAYSTRATE' (CONTROL LINE WIRE)
1/8" MUSIC WIRE
RIGGING L.H. SHOWN
6.75"
7.25"
BRACKETS FORMED FROM 1/64" ALUMINUM CAPPING
UNDER-CARRIAGE
4.75"D WHEEL
PERSPEX
CHANNEL FROM BRASS SHEET SOLDER 1/16" MUSIC WIRE
WINDSHIELD
1"x1/4" T.E. BALSA
3/4"x1/4" T.E. BALSA
DUMMY CAP 3/8" DOWEL
1/8"D NYLON PRESSURE TUBE BUSHING
1/16"D HOLES
HORN DETAIL H3 (4 OFF)
LAMINATE FROM 1mm PLY (GRAIN OF ONE 90° TO OTHER)
1/2 PATTERN FOR FUSELAGE
1mm PLY
LH SIDE SHOWN EQUAL ABOUT ℄
EYE HOOKS
BALSA TANK TOP
DUMMY STRAPS
AMMUNITION RACK
1/8"D HOLES
WHITE
W3B
W2A
1/4" BALSA
D
H3
DUMMY STICHING
LACE THICK THREAD AROUND PINS, GLUE IN POSITION & REMOVE PINS
1/16" BALSA FLOOR
THIS AREA LIGHT BUFF
1/16"x1/8" BALSA BEADING
1/4"D HOLE
1/4" SQ BALSA, SHAPE
EYE HOOKS FOR RIGGING
1mm PLY PLATE OUTER
1/4"D HOLE
DUMMY SPRING
H.E
1/16"D HOLES
DETAIL 'H2'
1/4"D HOLE
DETAIL 'H1'
1/16"D HOLES
DETAIL 'H5' (3 OFF)
LAMINATE H1 H2 H5 FROM 1mm PLY (GRAIN OF ONE 90° TO OTHER)
DETAIL 'F'
3/8" OD ALUMINUM TUBE (2 OFF)
LAMINATE FROM 2 OFF 1/16"x1/4" HARD BALSA
3/16" SQ BALSA
5/16"x1/4" SPRUCE
BLUE
WHITE
RED
SHEET BRASS SPLINT & NO 4 SELF TAPPERS
1/4" SQ BALSA
SPRUCE GUSSET
1/8"DU-BRO COLLAR
NO 6 SELF TAPPERS
H5
3/16" SQ SPRUCE OR HARD BALSA
ALL STRUTS 1/4" PLY
1/4" SPRUCE OR HARD BALSA
7938
1/8"D MUSIC WIRE HINGE DRILL HOLE PRIOR TO CONSTRUCTION
SAW SLOT IN STRUT & EPOXY IN DETAIL 'E' (TYPICAL)
BRASS PLATE
SPRING 1/64" MUSIC WIRE
1/8"D DU BRO COLLAR
COTTER PIN
SMALL BRASS & SOLDER
EYE HOOKS USE SMALLEST AVAILABLE
NOTE
EPOXY DETAIL 'E' TO BOOMS AFTER BOOMS ARE FIXED TO WING & ALIGNED, THEN RIG REAR SECTION.
1/4" HARDWOOD
DETAIL 'E'
FORM FROM 1/64" ALUMINUM CAPPING
CAP WITH BRASS SHEET
DIHEDRAL BRACE B1 (2 OFF) 1/8" PLY
3° OR 2 1/8" AT TIP OF EACH WING
1/8"D HOLES
EPOXY TOGETHER & DRILL 1/8"D HOLE
SCALE PROPELLER
1"x1 1/2" PINE
WING INCIDENCE 5° (CHORD) (3° ALONG BASE)
1/16" ALUMINUM
DETAIL 'D'
TAIL SKID (PLAN VIEW)
1/8" ALUMINUM
BOOM WITH TAIL ASSY SET IN 'PLASTI-BOND'
1/4"x 3/8" BALSA
W7
W8
B1
1/4" SQ SPRUCE OR HARD BALSA
1/8" BALSA
WHITE
BLUE
W3A
W3
W3
W3
W2
W4
W4
W5
W6
W5
W8 BOTTOM WING
W7 BOTTOM WING
1/4" SQ SPRUCE OR HARD BALSA
B1
1/4" PLY PLATE WITH H3 BOTTOM WINGS ONLY
5/8"x 1/4" BALSA
WING (TYPICAL)
TOP RH SHOWN
CUT OUT AILERONS AFTER BUILDING WINGS
COLOUR SCHEME
FUSELAGE, FIN, TAIL BOOMS, WHEELS, AXLE
TOP SURFACES OF WINGS & TAILPLANE
-KHAKI-GREEN.
UNDERSURFACES OF WING & TAILPLANE
- CLEAR DOPED, LIGHT BUFF.
STRUTS-POLISHED WOOD.
OVERALL COAT WITH SCANDENAVIAN MATT VARNISH
MOTOR: OS H 60F (REVERSED)
PROPELLER: 12"x 6"
WEIGHT: 9LB INCLUDING BALLAST
WING SPAN: 60"
LENTH: 53.5"
WING AREA 1120 SQ INCHES
RADIO: 4 CHANNEL, KRAFT 73, KPS 15 SERVOS USED.
COMMERCIAL USE OF THIS PLAN BY PERMISSION OF THE DESIGNER ONLY
SHEET 1 OF 2
DE HAVILLAND
1915 D.H.2 1918
DESIGNED & DRAWN BY
ALEXANDER W. MEEK
SCALE
2.12": 1'
0 1 2 3 4 5 6

PLAN NO. 572

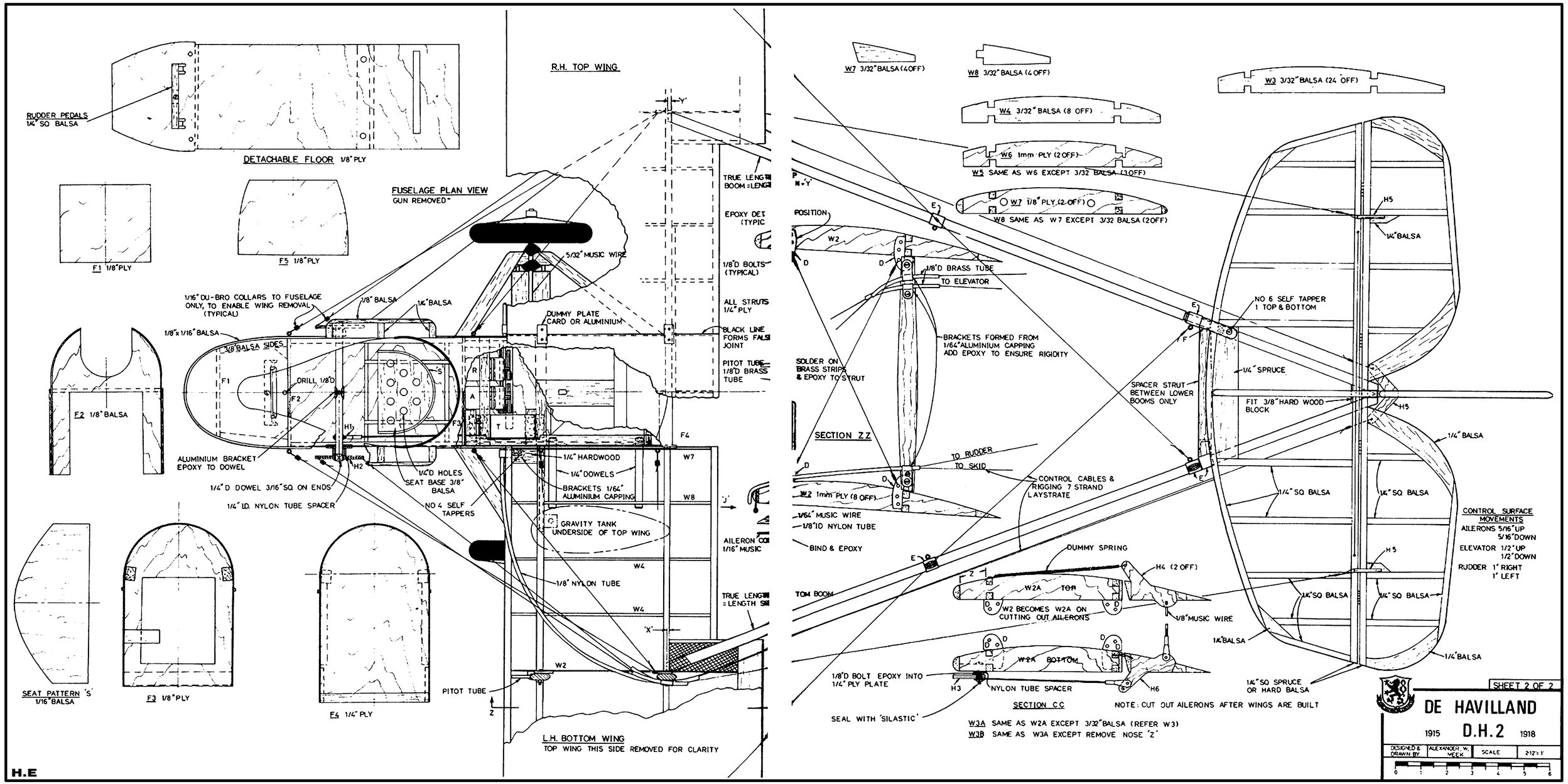
RUDDER PEDALS 1/4" SQ BALSA
DETACHABLE FLOOR 1/8" PLY
F1 1/8" PLY
F5 1/8" PLY
F2 1/8" BALSA
FUSELAGE PLAN VIEW
GUN REMOVED
R.H. TOP WING
5/32" MUSIC WIRE
1/16" DU-BRO COLLARS TO FUSELAGE ONLY, TO ENABLE WING REMOVAL (TYPICAL)
1/8" BALSA
1/4" BALSA
1/8"x 1/16" BALSA
1/8" BALSA SIDES
DRILL 1/8"D
DUMMY PLATE CARD OR ALUMINIUM
TRUE LENGTH BOOM = LENGTH
EPOXY DET (TYPIC
1/8"D BOLTS (TYPICAL)
ALL STRUTS 1/4" PLY
BLACK LINE FORMS FALSE JOINT
PITOT TUBE 1/8"D BRASS TUBE
ALUMINIUM BRACKET EPOXY TO DOWEL
1/4" D DOWEL 3/16" SQ ON ENDS
1/4" I.D. NYLON TUBE SPACER
1/4"D HOLES SEAT BASE 3/8" BALSA
NO 4 SELF TAPPERS
1/4" HARDWOOD
1/4" DOWELS
BRACKETS 1/64" ALUMINIUM CAPPING
GRAVITY TANK UNDERSIDE OF TOP WING
AILERON CO 1/16" MUSIC
1/8" NYLON TUBE
TRUE LENGTH = LENGTH SE
PITOT TUBE
SEAT PATTERN 'S' 1/16" BALSA
F3 1/8" PLY
F4 1/4" PLY
L.H. BOTTOM WING
TOP WING THIS SIDE REMOVED FOR CLARITY
W7 3/32" BALSA (4 OFF)
W8 3/32" BALSA (4 OFF)
W3 3/32" BALSA (24 OFF)
W4 3/32" BALSA (8 OFF)
W6 1mm PLY (2 OFF)
W5 SAME AS W6 EXCEPT 3/32 BALSA (3 OFF)
W7 1/8" PLY (2 OFF)
W8 SAME AS W7 EXCEPT 3/32 BALSA (2 OFF)
POSITION
1/8"D BRASS TUBE TO ELEVATOR
BRACKETS FORMED FROM 1/64" ALUMINIUM CAPPING ADD EPOXY TO ENSURE RIGIDITY
SOLDER ON BRASS STRIPS & EPOXY TO STRUT
SECTION ZZ
TO RUDDER
TO SKID
CONTROL CABLES & RIGGING 7 STRAND LAYSTRATE
W2 1mm PLY (8 OFF)
1/64" MUSIC WIRE
1/8"ID NYLON TUBE
BIND & EPOXY
TOM BOOM
DUMMY SPRING
H4 (2 OFF)
W2A TOP
W2 BECOMES W2A ON CUTTING OUT AILERONS
1/8" MUSIC WIRE
W2A BOTTOM
1/8"D BOLT EPOXY INTO 1/4" PLY PLATE
H3
NYLON TUBE SPACER
H6
SEAL WITH 'SILASTIC'
SECTION CC
NOTE: CUT OUT AILERONS AFTER WINGS ARE BUILT
W3A SAME AS W2A EXCEPT 3/32" BALSA (REFER W3)
W3B SAME AS W3A EXCEPT REMOVE NOSE 'Z'
NO 6 SELF TAPPER 1 TOP & BOTTOM
1/4" SPRUCE
SPACER STRUT BETWEEN LOWER BOOMS ONLY
FIT 3/8" HARD WOOD BLOCK
1/4" BALSA
1/4" SQ BALSA
CONTROL SURFACE MOVEMENTS
AILERONS 5/16" UP 5/16" DOWN
ELEVATOR 1/2" UP 1/2" DOWN
RUDDER 1" RIGHT 1" LEFT
1/4" SQ SPRUCE OR HARD BALSA
SHEET 2 OF 2
DE HAVILLAND
1915 D.H.2 1918
DESIGNED & DRAWN BY ALEXANDER. W. WEEK
SCALE 2·12 = 1'
H.E
PLAN NO. 572