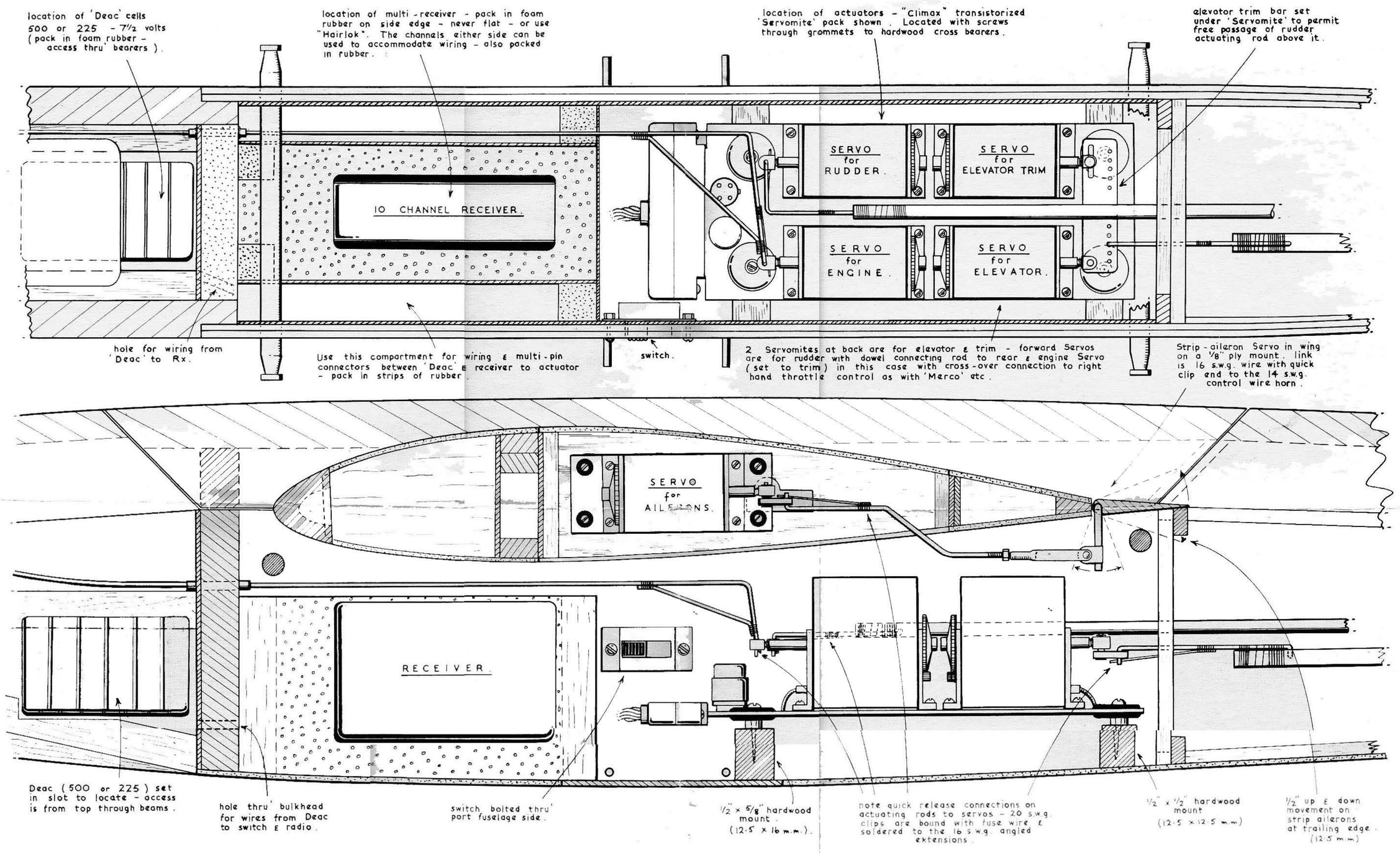

VERON CONCORD
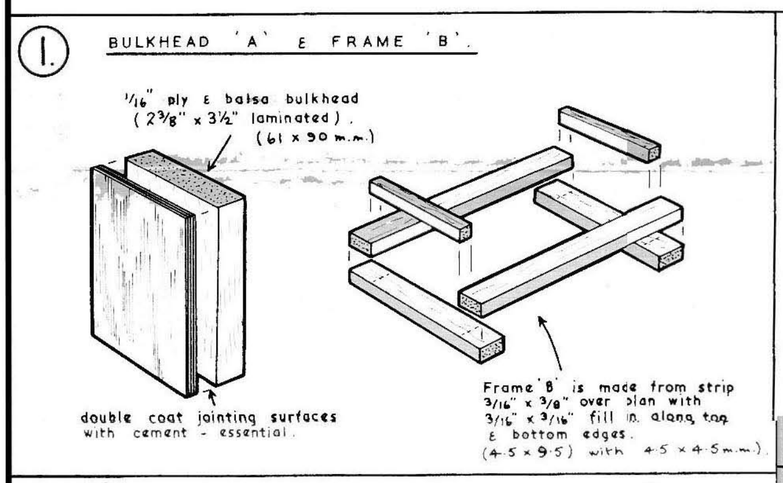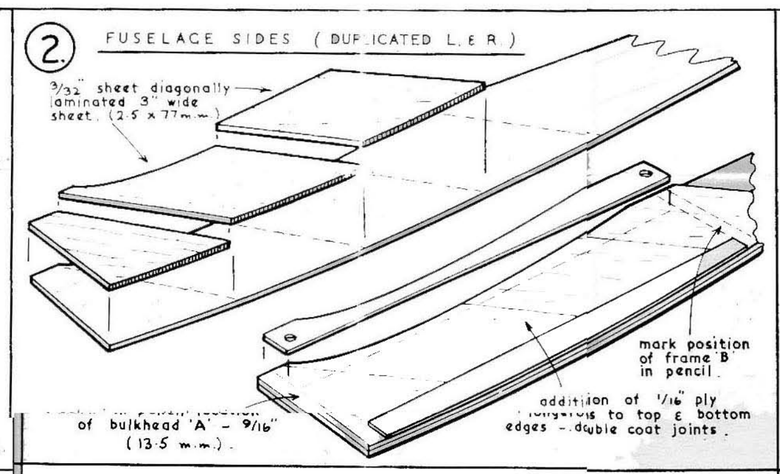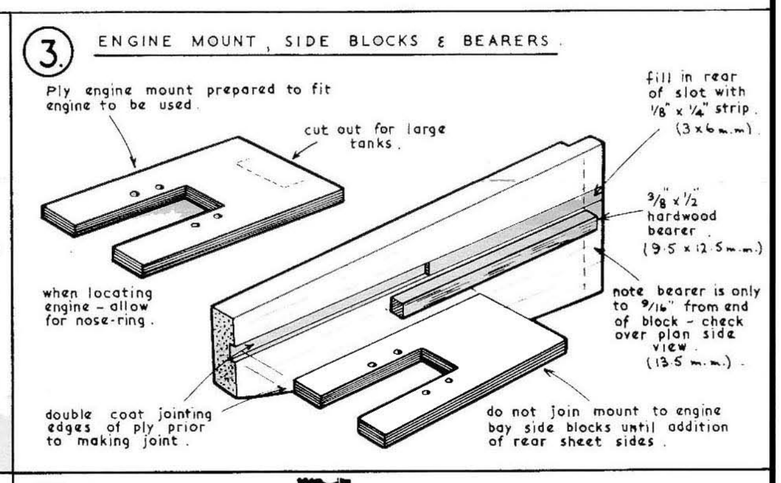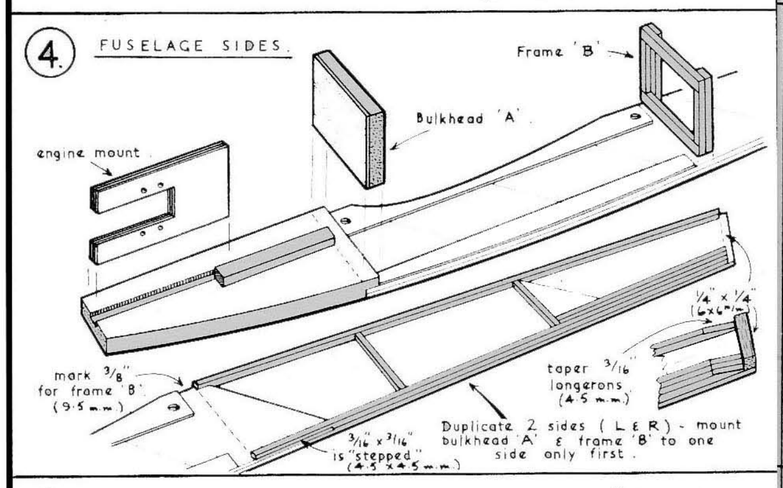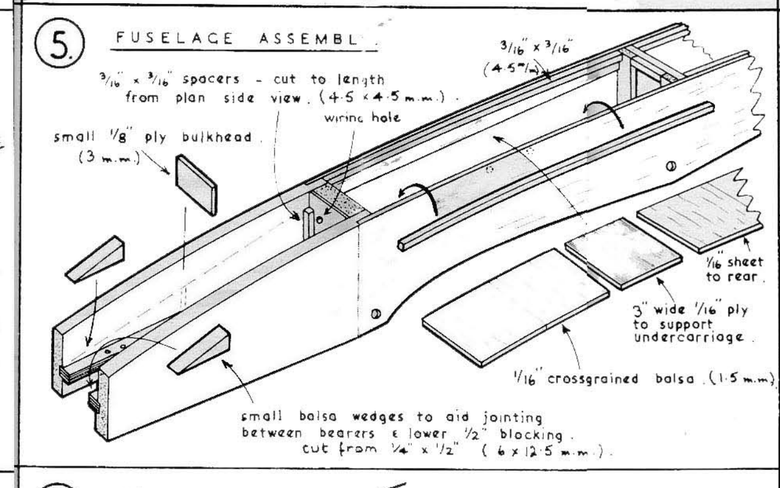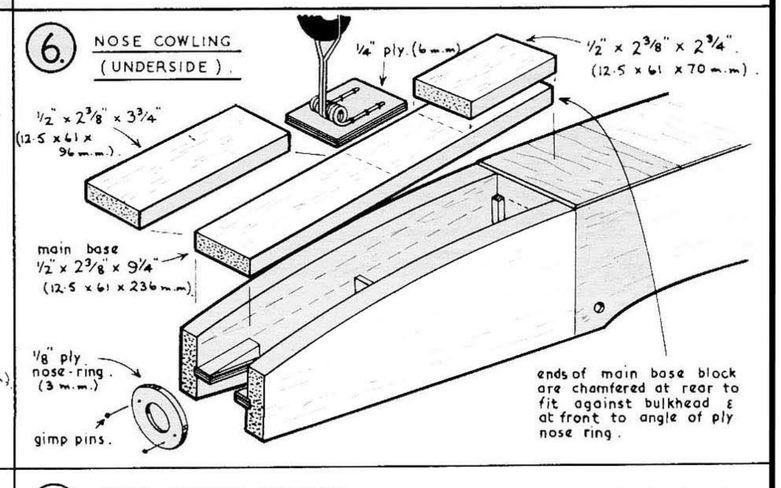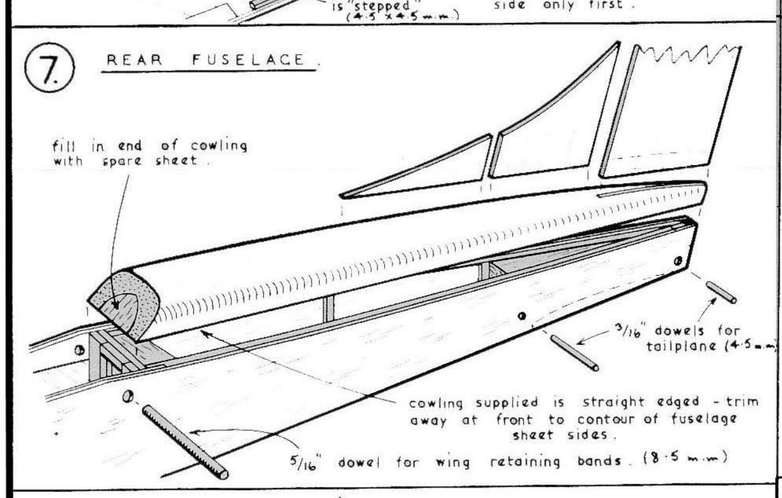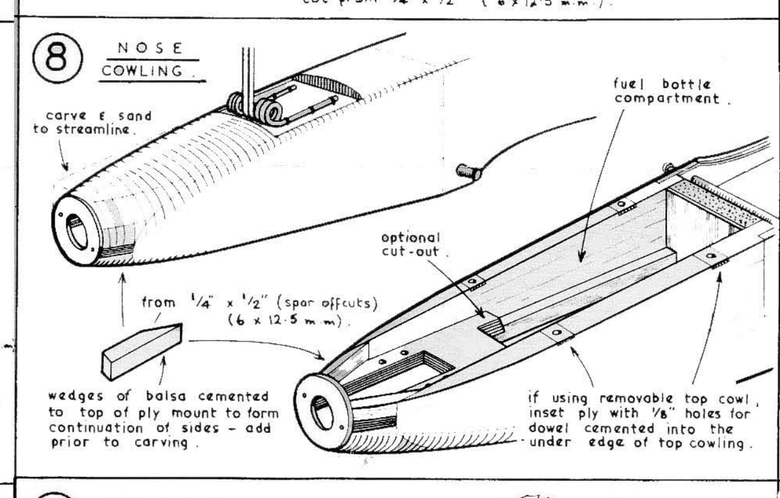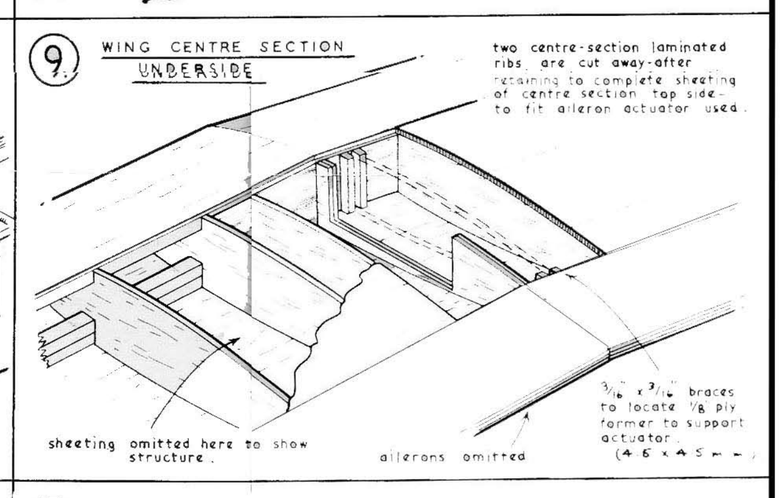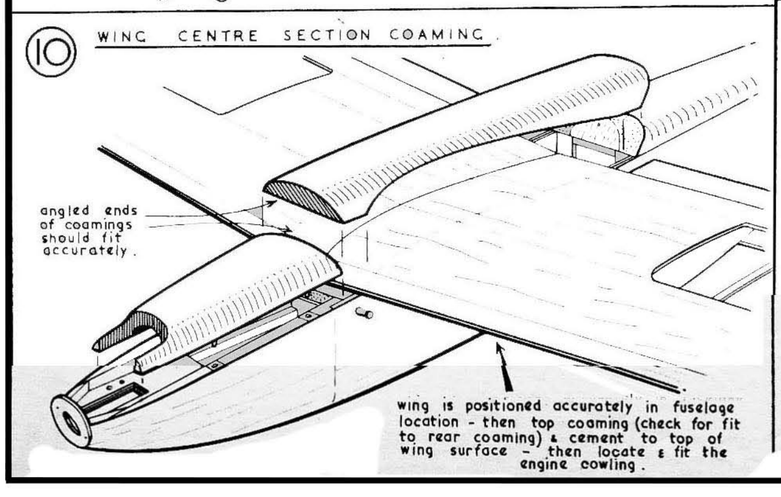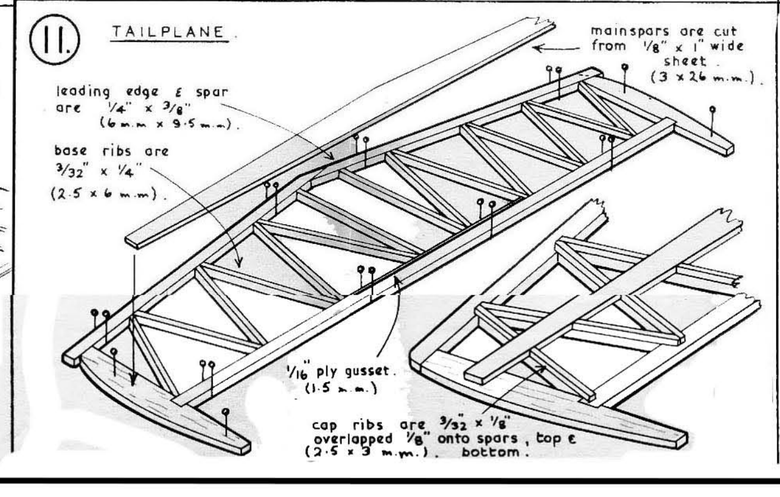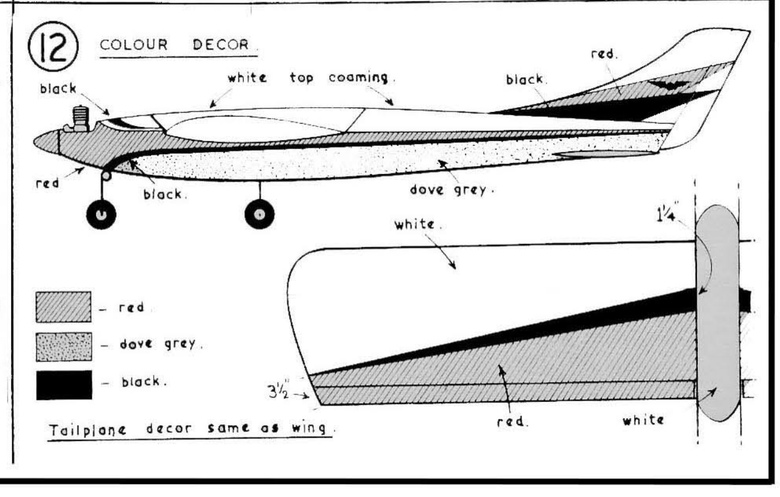
TYPICAL INSTALLATION DIAGRAM FOR ACTUATOR PACK IS SHOWN ABOVE - SMALL COMPACT TRANSISTORIZED ACTUATORS ON VIBRATION FREE MOUNTING. DIAGRAMS BELOW SHOW PICTORIAL SEQUENCE OF ASSEMBLY FOR AIRFRAME ETC..