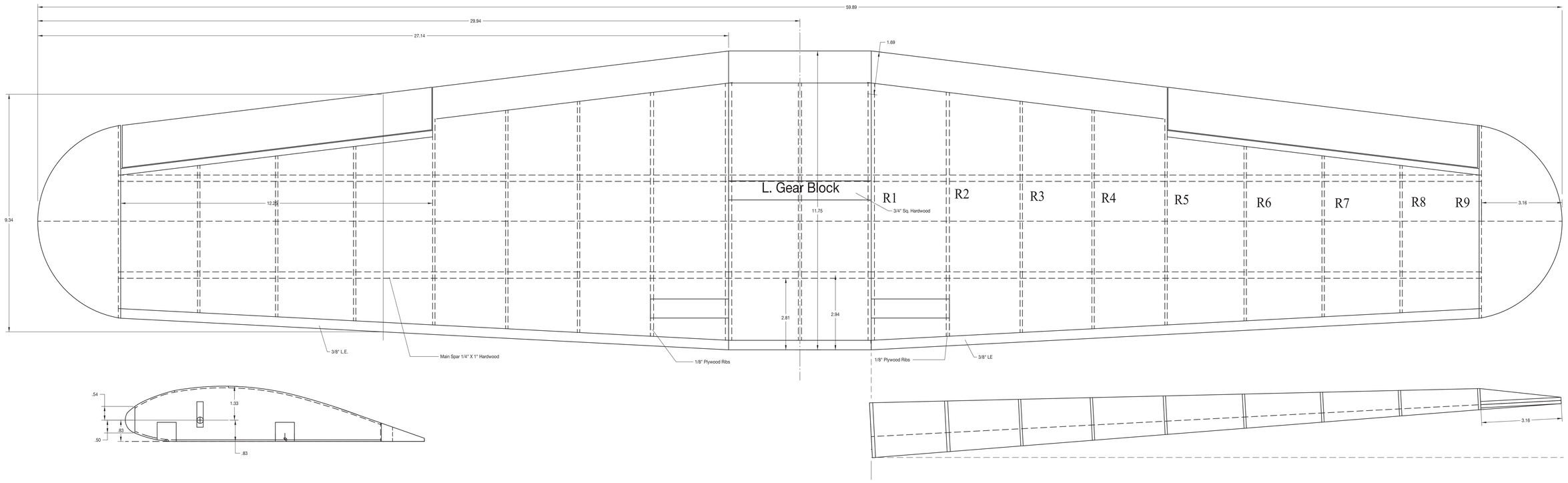
59.80
29.94
27.14
1.69
9.34
12.24
L. Gear Block
11.75
R1
R2
R3
R4
R5
R6
R7
R8
R9
3.16
3/4" Sq. Hardwood
2.81
2.94
3/8" L.E.
Main Spar 1/4" X 1" Hardwood
1/8" Plywood Ribs
1/8" Plywood Ribs
3/8" LE


.54
1.33
.83
.50
.83


3.16

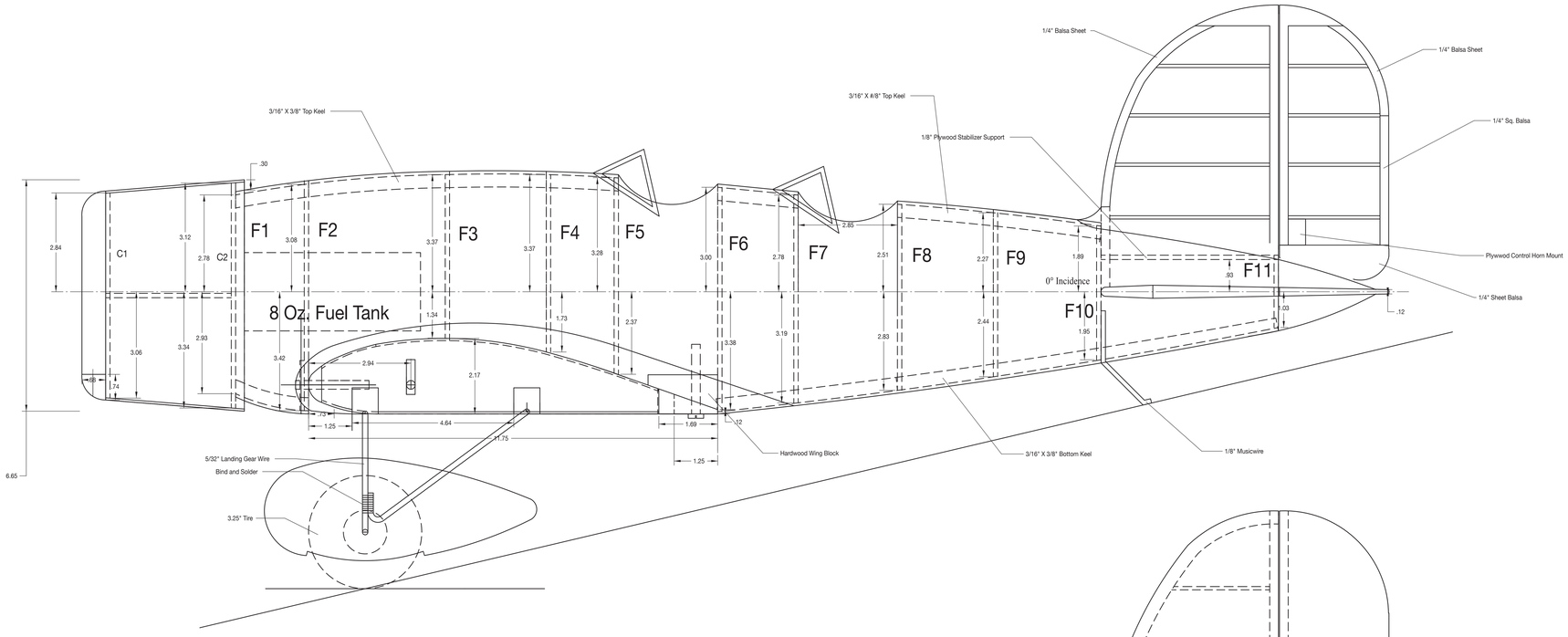
1/4" Balsa Sheet
1/4" Balsa Sheet
3/16" X 3/8" Top Keel
3/16" X 8/8" Top Keel
1/4" Sq. Balsa
1/8" Plywood Stabilizer Support
.30
C1
C2
F1
F2
F3
F4
F5
F6
F7
F8
F9
F10
F11
0° Incidence
8 Oz. Fuel Tank
Plywood Control Horn Mount
1/4" Sheet Balsa
.12
Hardwood Wing Block
3/16" X 3/8" Bottom Keel
1/8" Musicwire
5/32" Landing Gear Wire
Bind and Solder
3.25" Tire
6.65

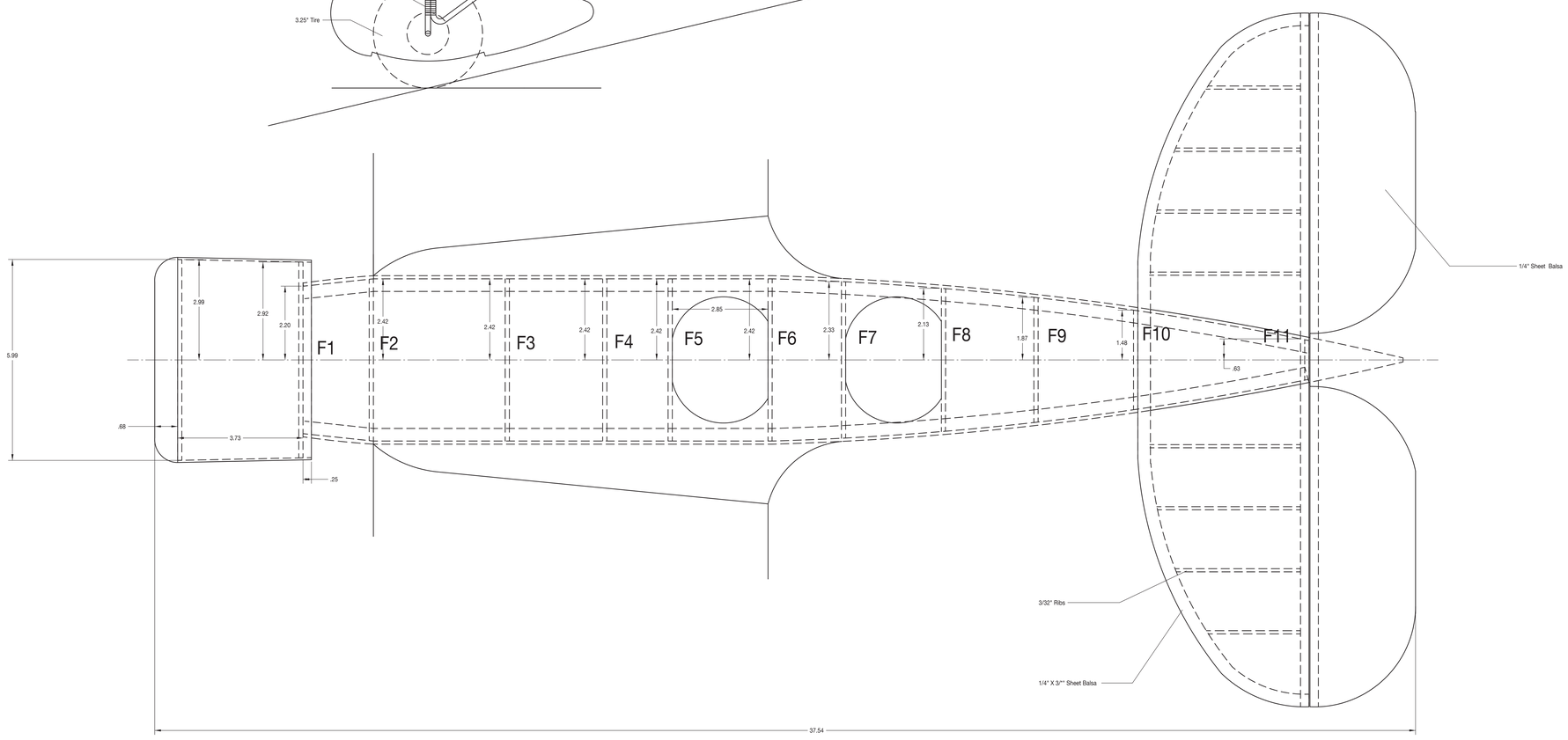
1/4" Sheet Balsa
5.99
F1
F2
F3
F4
F5
F6
F7
F8
F9
F10
F11
.68
3.73
.25
.63
3/32" Ribs
1/4" X 3/"" Sheet Balsa
37.54

# Sirius-40

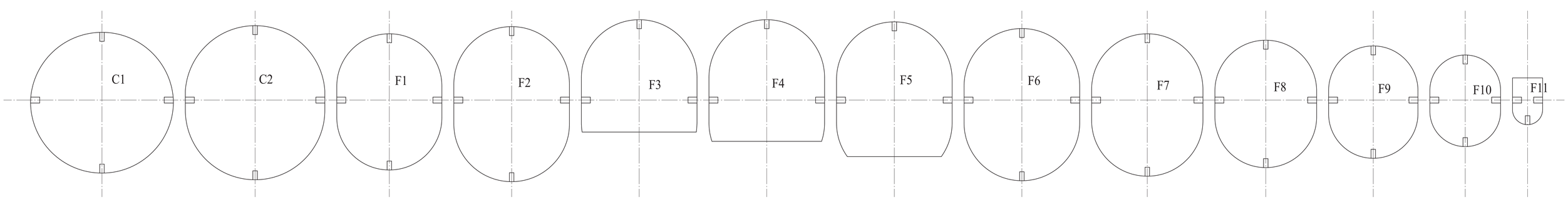
C1
C2
F1
F2
F3
F4
F5
F6
F7
F8
F9
F10
F11