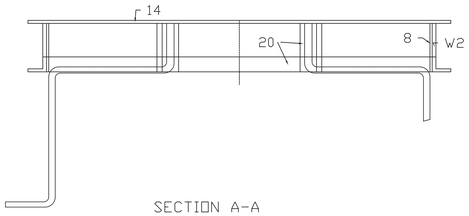

SECTION A-A

CONTROL SURFACE TRAVEL LIMITS
ELEVATOR SET WITH 1/8" UP AT NEUTRAL, AND 1/2" OF TRAVEL IN EACH DIRECTION.
AILERONS. SET WITH 3/8" OF TRAVELIN EACH DIRECTION.

WOOD COMPONENTS - DATA
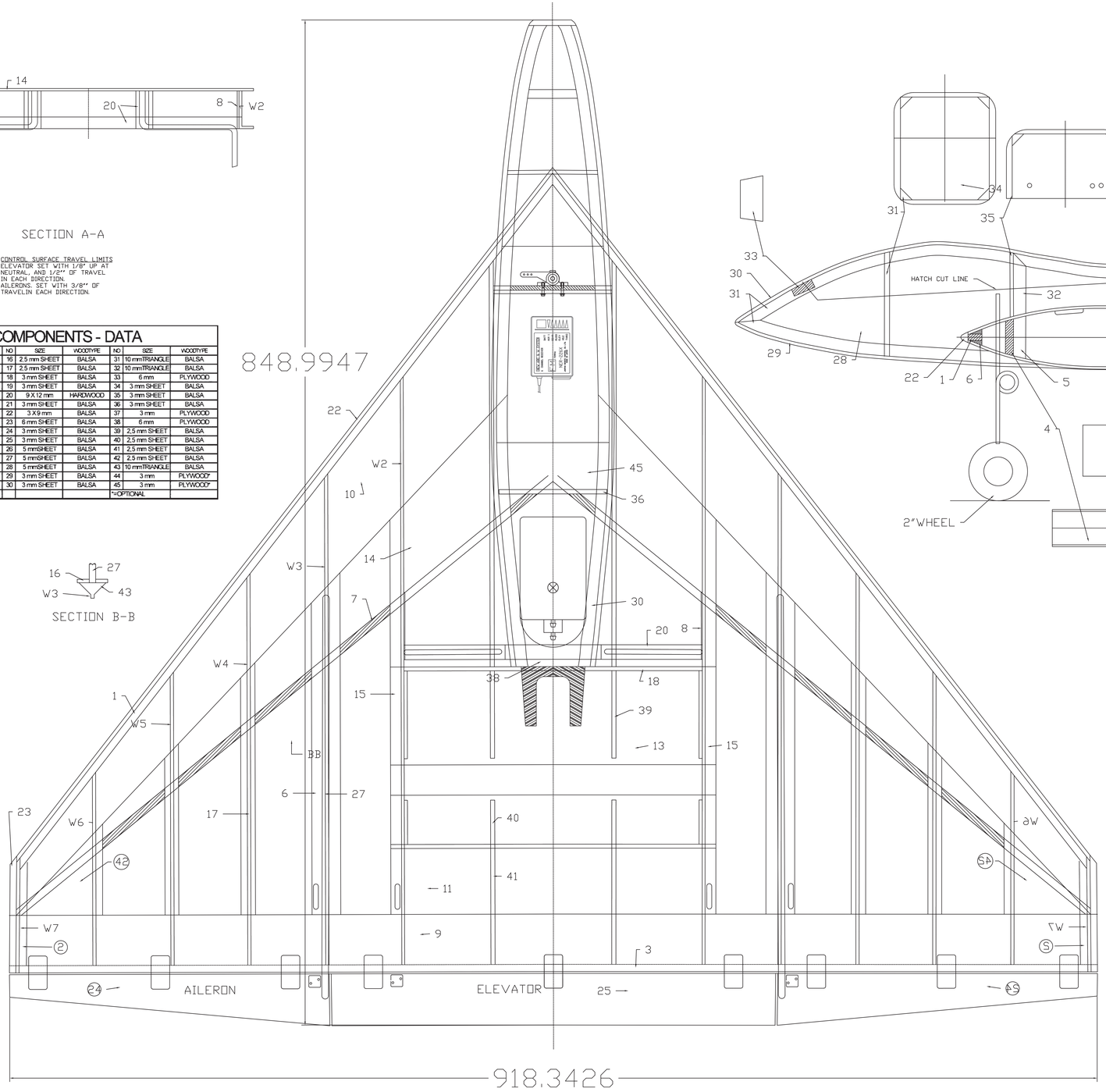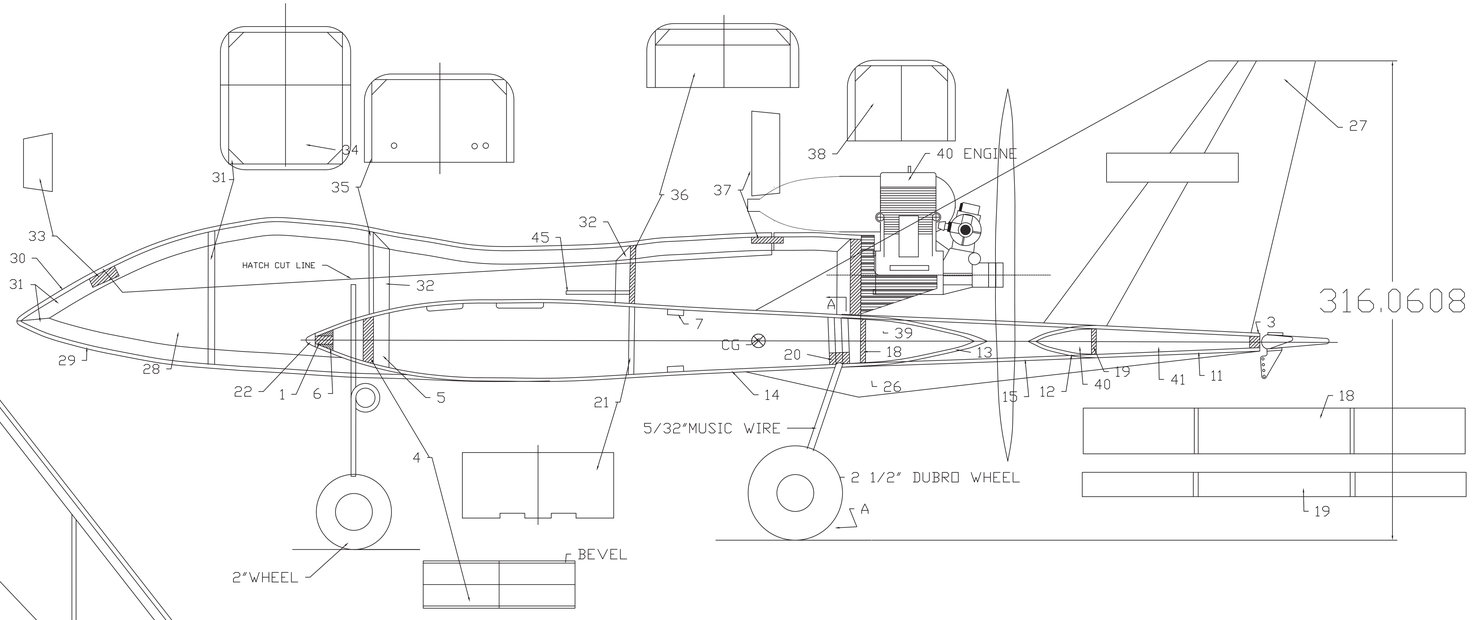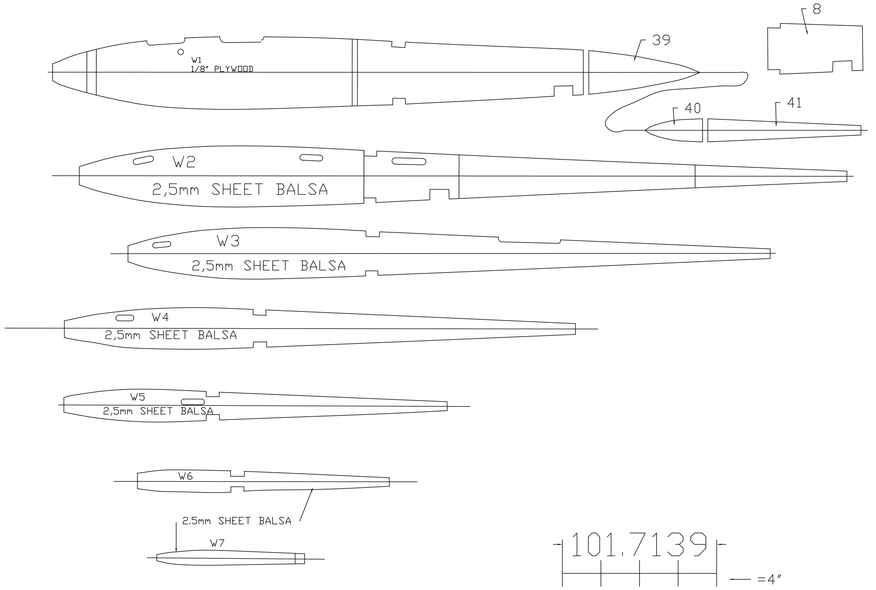
NO	SIZE	WOODTYPE	NO	SIZE	WOODTYPE	NO	SIZE	WOODTYPE
1	6 mmSQUARE	SPRUCE	16	2.5 mm SHEET	BALSA	31	10 mmTRIANGLE	BALSA
2	6 mmSQUARE	SPRUCE	17	2.5 mm SHEET	BALSA	32	10 mmTRIANGLE	BALSA
3	6 mmSQUARE	SPRUCE	18	3 mm SHEET	BALSA	33	6 mm	PLYWOOD
4	6mm	PLYWOOD	19	3 mm SHEET	BALSA	34	3 mm SHEET	BALSA
5	10 mmTRIANGLE	BALSA	20	9 X 12 mm	HARDWOOD	35	3 mm SHEET	BALSA
6	3 X 6 mm	BALSA	21	3 mm SHEET	BALSA	36	3 mm SHEET	BALSA
7	3 X 6 mm	SPRUCE	22	3 X 9 mm	BALSA	37	3 mm	PLYWOOD
8	1.5 mm	PLYWOOD	23	6 mm SHEET	BALSA	38	6 mm	PLYWOOD
9	2.5 mm SHEET	BALSA	24	3 mm SHEET	BALSA	39	2.5 mm SHEET	BALSA
10	2.5 mm SHEET	BALSA	25	3 mm SHEET	BALSA	40	2.5 mm SHEET	BALSA
11	2.5 mm SHEET	BALSA	26	5 mmSHEET	BALSA	41	2.5 mm SHEET	BALSA
12	2.5 mm SHEET	BALSA	27	5 mmSHEET	BALSA	42	2.5 mm SHEET	BALSA
13	2.5 mm SHEET	BALSA	28	5 mmSHEET	BALSA	43	10 mmTRIANGLE	BALSA
14	2.5 mm SHEET	BALSA	29	3 mm SHEET	BALSA	44	3 mm	PLYWOOD*
15	2.5 mm SHEET	BALSA	30	3 mm SHEET	BALSA	45	3 mm	PLYWOOD*
						*=OPTIONAL