A BABY 29" SPAN POWER MODEL

ELFIN.

DESIGNED BY

N. J. BUTCHER.

3/-

COPYRIGHT OF

THE AEROMODELLER PLANS SERVICE.

ALLEN HOUSE, NEWARKE STREET, LEICESTER.

ALL WOODS UNLESS OTHERWISE STATED ARE BALSA

WING SPAN	25"	0·5 OZS
TAILPLANE SPAN	10"	0·25 "
FUSELAGE LENGTH	18"	1·75 "
MOTOR MOUNT		0·5 "
	TOTAL.	3·0 "

POWER.

ANY DIESEL FROM 0·5 CC TO 0·9 CC

MATERIALS REQUIRED.

STRIP.

- 4 STRIPS OF 3/32" X 3/32" X 36" BALSA
- 1 " " 1/16" X 3/16" X 12" "
- 1 " " 1/8" X 1/8" X 36" "
- 1 " " 1/8" X 1/4" X 36" "
- 1 " " 1/8" X 3/8" X 12" "
- 1 " " 1/8" X 1/2" X 36" "
- 1 " " 1/4" X 1/4" X 36" "

SHEET.

- 2 SHEETS OF 1/32" X 3" X 36" BALSA
- 2 " " 1/16" X 3" X 36" "

MISCELLANEOUS.

- 1 PIECE OF 1MM PLY 2" X 2"
- 1 " " 1/16" " 6" X 6"
- 16" OF 1/16" DIA BAMBOO
- 7" " 1/8 DIA DOWLING.
- 8" " 16 SWG PIANO WIRE
- 1 PIECE OF 20 SWG ALUMINIUM 3/4" X 3 1/2"
- SMALL PIECE OF 3/32" SHEET BALSA
- 2 1/2" OF 1/8" X 1/8" BIRCH
- SMALL OBECHI BLOCK 1/4" X 1/4" X 1/2"
- 3/4" DIA HARDWOOD WHEEL.

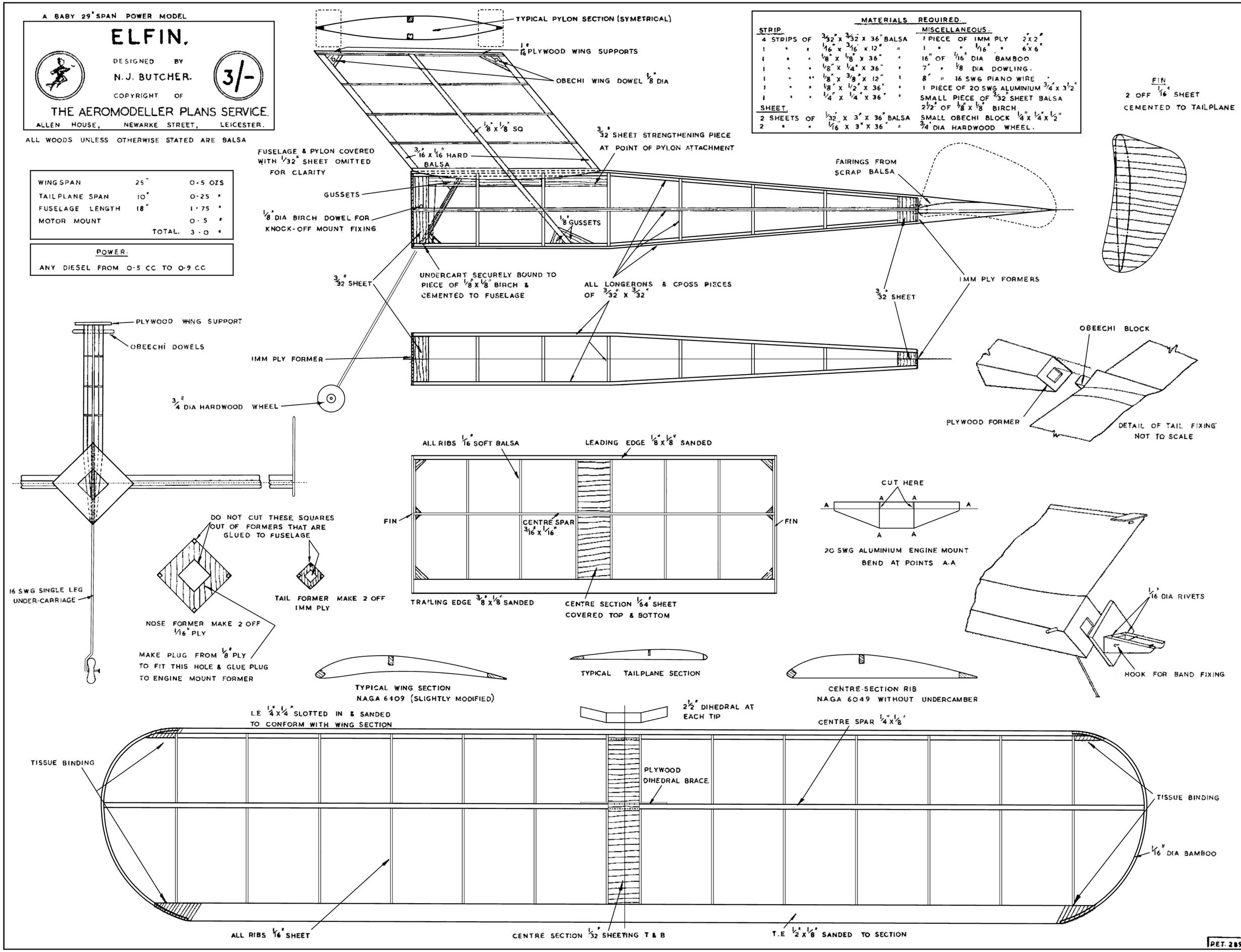

PET. 289.