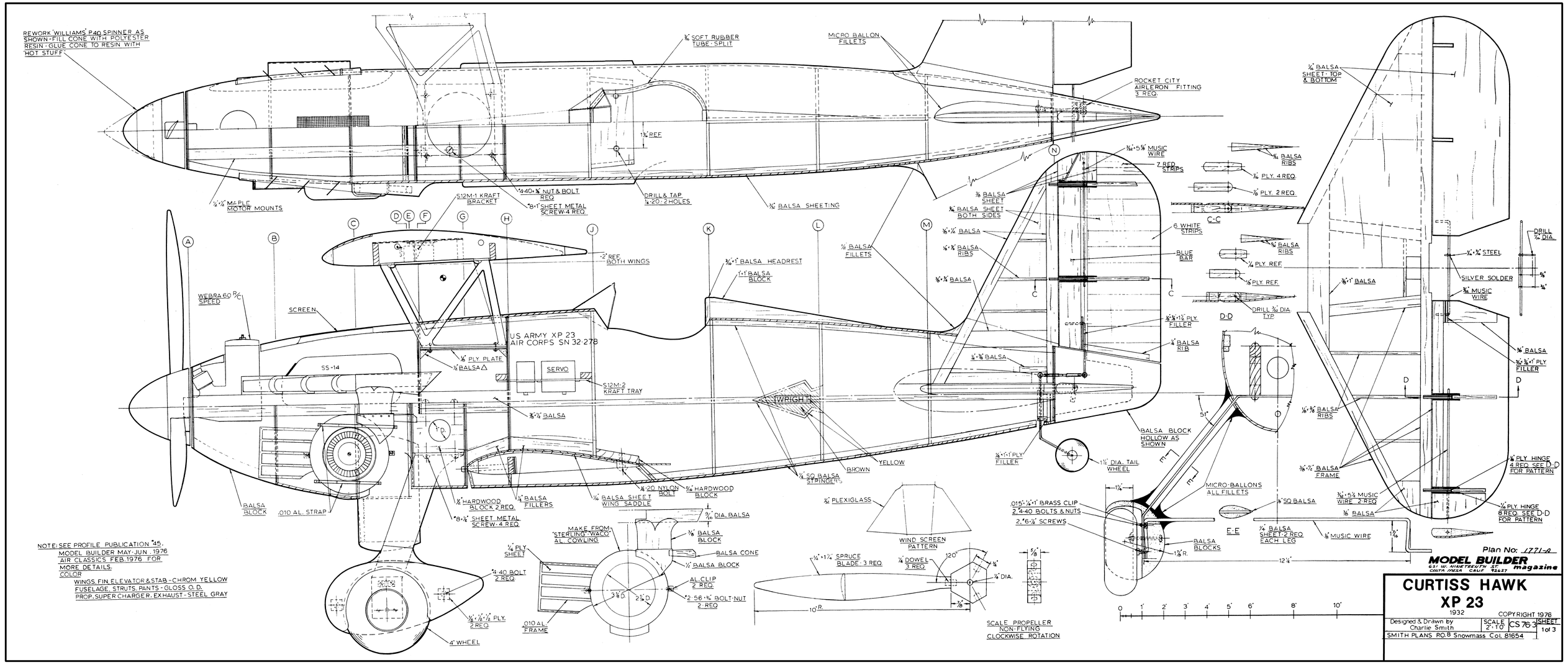
REWORK WILLIAMS P40 SPINNER AS SHOWN - FILL CONE WITH POLYESTER RESIN - GLUE CONE TO RESIN WITH HOT STUFF
3/8" SOFT RUBBER TUBE - SPLIT
MICRO BALLON FILLETS
ROCKET CITY AIRLEON FITTING 3 REQ.
1/4" BALSA SHEET - TOP & BOTTOM
1 1/2" REF
1/2"-1/4" MAPLE MOTOR MOUNTS
S12M-1 KRAFT BRACKET
#4-40 - 3/8" NUT & BOLT REQ
#8-1" SHEET METAL SCREW - 4 REQ.
DRILL & TAP 1/4-20 - 2 HOLES
3/8" BALSA SHEETING
3/32"-5 5/8" MUSIC WIRE
7 RED STRIPS
3/8" BALSA SHEET
1/4" BALSA SHEET BOTH SIDES
3/8"-1/2" BALSA
1/4"-3/8" BALSA RIBS
1/2" BALSA FILLETS
3/8"-3/8" BALSA
6 WHITE STRIPS
BLUE BAR
1/4" BALSA RIBS
1/8" PLY. 4 REQ.
1/8" PLY. 2 REQ.
C-C
1/4" BALSA RIBS
1/8" PLY REF.
1/8" PLY. REF.
DRILL 3/32" DIA. TYP
D-D
1/4"-3/8"-1 1/2" PLY. FILLER
1/4" BALSA RIB
1/4"-3/8" BALSA
1/4"-1"-1" PLY. FILLER
1 1/2" DIA. TAIL WHEEL
BALSA BLOCK HOLLOW AS SHOWN
51°
1/4"-1/4" STEEL
SILVER SOLDER
3/8"-1" BALSA
3/32" MUSIC WIRE
DRILL 1/8" DIA.
3/8" BALSA
3/8"-3/8"-1" PLY FILLER
1/8"-3/8" BALSA RIBS
3/8"-1/2" BALSA FRAME
1/8" PLY HINGE 4 REQ. SEE D-D FOR PATTERN
1/8" PLY HINGE 8 REQ. SEE D-D FOR PATTERN
3/32"-5 1/4" MUSIC WIRE 2 REQ
3/8" BALSA
1/4" SQ BALSA
1/4" BALSA SHEET - 2 REQ EACH LEG
1/8" MUSIC WIRE
E-E
MICRO-BALLONS ALL FILLETS
.015"-1/4"-1" BRASS CLIP
2, #4-40 BOLTS & NUTS
2, #6-1/2" SCREWS
BALSA BLOCKS
1 1/4"
1 7/8" R.
12 1/4"
WEBRA 60 P/C SPEED
SCREEN
SS-14
US ARMY XP 23
AIR CORPS SN 32-278
1/8" PLY PLATE
1/8" BALSA
SERVO
S12M-2 KRAFT TRAY
3/8"-1/2" BALSA
2" REF. BOTH WINGS
3/16"-1" BALSA HEADREST
1"-1" BALSA BLOCK
WRIGHT
YELLOW
BROWN
1/4" SQ BALSA STRINGERS
1/4"-20 NYLON BOLT
5/16" HARDWOOD BLOCK
1/8" BALSA SHEET WING SADDLE
1/4" BALSA FILLERS
1/2" HARDWOOD BLOCK 2 REQ.
#8-1/2" SHEET METAL SCREW - 4 REQ.
BALSA BLOCK
.010 AL. STRAP
1/4" PLEXIGLASS
WIND SCREEN PATTERN
9/16" DIA. BALSA
3/8" BALSA BLOCK
BALSA CONE
1/2" BALSA BLOCK
AL. CLIP 2 REQ.
#2-56 - 1/4" BOLT - NUT 2 REQ
MAKE FROM "STERLING" - "WACO" AL. COWLING
1/4" PLY SHEET
#4-40 BOLT 2 REQ
1/4"-1/2"-1/8" PLY. 2 REQ
.010 AL. FRAME
4" WHEEL
1/4"-1 1/4" SPRUCE BLADE - 3 REQ.
1/4" DOWEL 3 REQ.
120°
1/4" DIA.
10" R.
5/8"
SCALE PROPELLER NON-FLYING CLOCKWISE ROTATION
0 1' 2' 3' 4' 5' 6' 8' 10'
NOTE: SEE PROFILE PUBLICATION #45, MODEL BUILDER MAY-JUN, 1976 AIR CLASSICS FEB. 1976 FOR MORE DETAILS.
COLOR
WINGS, FIN, ELEVATOR & STAB - CHROM YELLOW
FUSELAGE, STRUTS, PANTS - GLOSS O.D.
PROP, SUPER CHARGER, EXHAUST - STEEL GRAY
Plan No: 1771-A
MODEL BUILDER magazine
631 W. NINETEENTH ST. COSTA MESA CALIF. 92627
CURTISS HAWK XP 23
1932
COPYRIGHT 1976
Designed & Drawn by Charlie Smith
SCALE 2"=10"
CS 76-3
SHEET 1 of 3
SMITH PLANS PO.B Snowmass Col. 81654

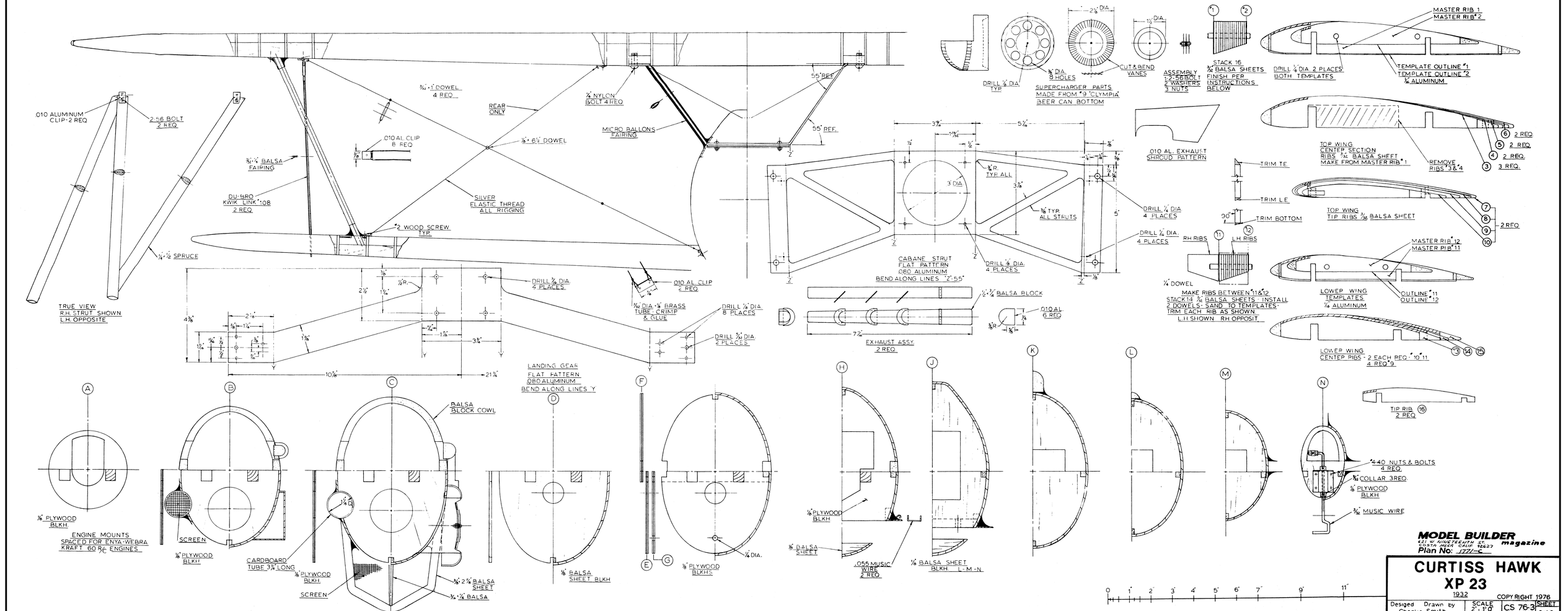
010 ALUMINUM CLIP-2 REQ
2-56 BOLT 2 REQ
1/4"x1/2 SPRUCE
TRUE VIEW R.H. STRUT SHOWN L.H. OPPOSITE
3/32"x1" DOWEL 4 REQ
REAR ONLY
1/4" NYLON BOLT 4 REQ
MICRO BALLONS FAIRING
55° REF.
55° REF.
010 AL CLIP 8 REQ
1/8"x6 1/2" DOWEL
3/32"x1/4" BALSA FAIRING
DU-BRO KWIK LINK #108 2 REQ
SILVER ELASTIC THREAD ALL RIGGING
#2 WOOD SCREW TYP.
DRILL 1/8" DIA. 4 PLACES
010 AL CLIP 2 REQ
1/32" DIA x 1/8" BRASS TUBE, CRIMP & GLUE
DRILL 1/8" DIA. 8 PLACES
DRILL 3/32" DIA. 2 PLACES
LANDING GEAR FLAT PATTERN .080 ALUMINUM BEND ALONG LINES 'Y'
1/8" R. TYP. ALL
3 DIA
3 7/8"
5 1/4"
3 1/8"
1 9/16"
1/8" TYP. ALL STRUTS
DRILL 1/8" DIA. 4 PLACES
DRILL 1/8" DIA. 4 PLACES
DRILL 1/8" DIA. 4 PLACES
CABANE STRUT FLAT PATTERN .080 ALUMINUM BEND ALONG LINES "Z"-55°
1/2"x1/4" BALSA BLOCK
010 AL 6 REQ
EXHAUST ASSY. 2 REQ.
2 1/8" DIA.
1/2" DIA.
1/8" DIA. 8 HOLES
DRILL 1/8" DIA. TYP.
CUT & BEND VANES
SUPERCHARGER PARTS MADE FROM #9 "CLYMPIA" BEER CAN BOTTOM
ASSEMBLY 1-2-56 BOLT 2 WASHERS 3 NUTS
STACK 16 3/32" BALSA SHEETS FINISH PER INSTRUCTIONS BELOW
MASTER RIB 1
MASTER RIB #2
DRILL 1/8" DIA. 2 PLACES BOTH TEMPLATES
TEMPLATE OUTLINE #1
TEMPLATE OUTLINE #2
1/8" ALUMINUM
010 AL. EXHAUST SHROUD PATTERN
TOP WING CENTER SECTION RIBS 3/32" BALSA SHEET MAKE FROM MASTER RIB #1
REMOVE RIBS #3 & 4
2 REQ
2 REQ.
3 REQ.
TRIM TE
TRIM LE
90°
TRIM BOTTOM
TOP WING TIP RIBS 3/32" BALSA SHEET
2 REQ
RH RIBS
LH RIBS
1/4" DOWEL
MAKE RIBS BETWEEN #11 & 12 STACK 14 3/32" BALSA SHEETS INSTALL 2 DOWELS - SAND TO TEMPLATES - TRIM EACH RIB AS SHOWN. L.H. SHOWN. RH OPPOSIT.
MASTER RIB #12
MASTER RIB #11
LOWER WING TEMPLATES 1/8" ALUMINUM
OUTLINE #11
OUTLINE #12
LOWER WING CENTER RIBS - 2 EACH REQ. #10 & 11 4 REQ #9
TIP RIB 2 REQ.
1/8" PLYWOOD BLKH
ENGINE MOUNTS SPACED FOR ENYA-WEBRA KRAFT 60 R/C ENGINES
SCREEN
1/8" PLYWOOD BLKH
CARDBOARD TUBE 3 3/4" LONG
1/8" PLYWOOD BLKH
SCREEN
BALSA BLOCK COWL
3/32" 2 3/4" BALSA SHEET
3/4"x1/4" BALSA
1/8" BALSA SHEET BLKH
1/8" PLYWOOD BLKH'S
1/4" DIA.
1/8" PLYWOOD BLKH
1/8" BALSA SHEET
.055 MUSIC WIRE 2 REQ
1/8" BALSA SHEET BLKH. L-M-N
#4-40 NUTS & BOLTS 4 REQ.
3/8" COLLAR 3 REQ
1/8" PLYWOOD BLKH
3/32" MUSIC WIRE
0 1" 2" 3" 4" 5" 6" 7" 9" 11"
MODEL BUILDER magazine
421 W. NINETEENTH ST. COSTA MESA CALIF. 92627
Plan No: 1771-C
CURTISS HAWK XP 23
1932
COPYRIGHT 1976
Designed Drawn by Charlie Smith
SCALE 2"=1'0"
CS 76-3
SHEET 2 of 3
SMITH PLANS RD.8 Snowmass, Col. 81654

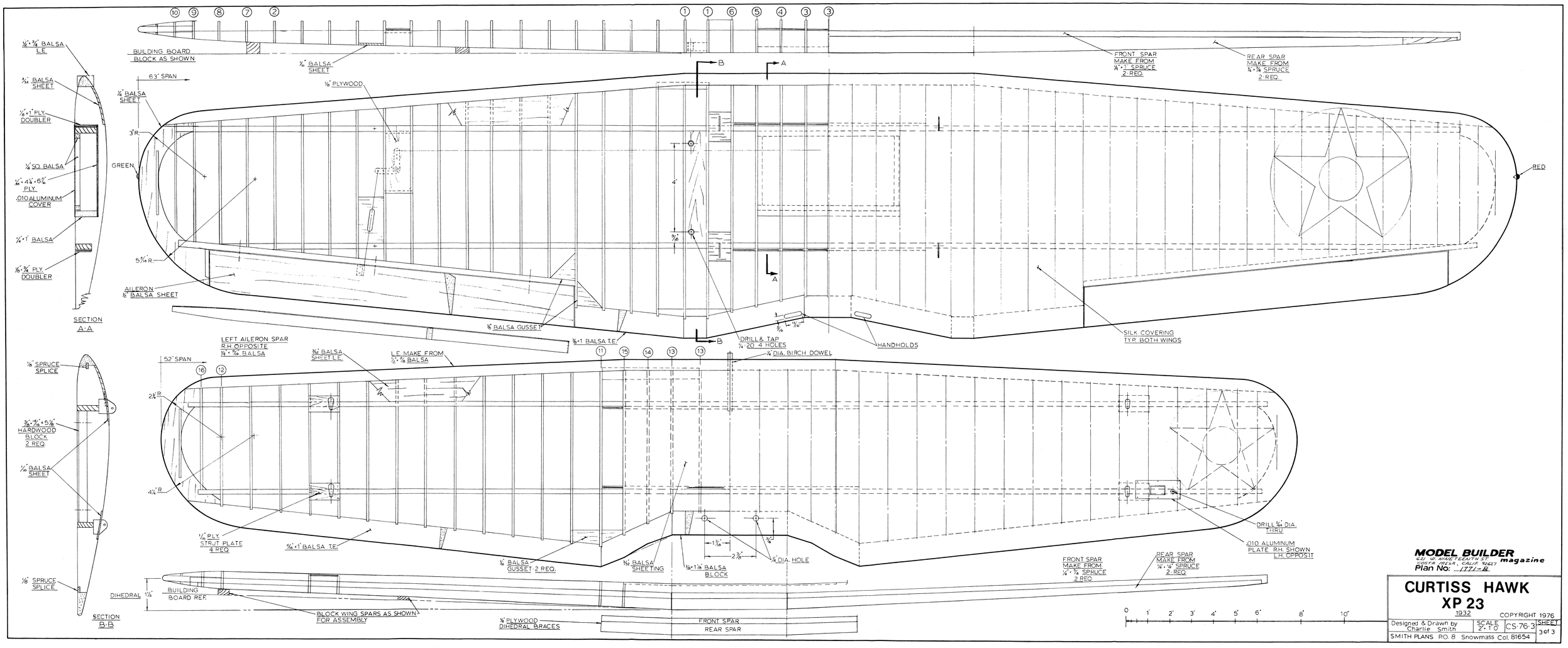
BUILDING BOARD BLOCK AS SHOWN
1/16" BALSA SHEET
FRONT SPAR MAKE FROM 1/4"·1" SPRUCE 2 REQ.
REAR SPAR MAKE FROM 1/4"·1/4" SPRUCE 2 REQ.
1/2"·3/4" BALSA L.E.
3/32" BALSA SHEET
1/8"·1" PLY DOUBLER
1/8" SQ. BALSA
1/16"·4 1/4"·6 1/4" PLY
.010 ALUMINUM COVER
1/4"·1" BALSA
1/16"·3/4" PLY DOUBLER
SECTION A-A
6.3" SPAN
1/4" BALSA SHEET
1/8" PLYWOOD
3" R.
GREEN
5 9/16" R.
AILERON 1/16" BALSA SHEET
1/8" BALSA GUSSET
3/8"·1" BALSA T.E.
DRILL & TAP 1/4"-20 4 HOLES
HANDHOLDS
SILK COVERING TYP. BOTH WINGS
RED
LEFT AILERON SPAR R.H. OPPOSITE 1/4"·3/4" BALSA
3/32" BALSA SHEET L.E.
L.E. MAKE FROM 1/2"·1/8" BALSA
1/4" DIA. BIRCH DOWEL
52" SPAN
2 1/4" R
4 1/4" R
1/8" SPRUCE SPLICE
3/8"·3/4"·5 1/8" HARDWOOD BLOCK 2 REQ.
1/16" BALSA SHEET
1/4" PLY STRUT PLATE 4 REQ.
3/8"·1" BALSA T.E.
1/8" BALSA GUSSET-2 REQ.
3/32" BALSA SHEETING
3/8"·1 1/8" BALSA BLOCK
1/4" DIA. HOLE
DRILL 3/16" DIA. THRU
.010 ALUMINUM PLATE R.H. SHOWN L.H. OPPOSIT
FRONT SPAR MAKE FROM 1/4"·3/4" SPRUCE 2 REQ.
REAR SPAR MAKE FROM 1/4"·1/4" SPRUCE 2 REQ.
1/8" SPRUCE SPLICE
DIHEDRAL 1 1/8"
BUILDING BOARD REF.
BLOCK WING SPARS AS SHOWN FOR ASSEMBLY
SECTION B-B
1/8" PLYWOOD DIHEDRAL BRACES
FRONT SPAR
REAR SPAR
0 1" 2" 3" 4" 5" 6" 8" 10"
MODEL BUILDER magazine
631 W. NINETEENTH ST. COSTA MESA, CALIF. 92627
Plan No: 1721-B
CURTISS HAWK XP 23
1932
COPYRIGHT 1976
Designed & Drawn by Charlie Smith
SCALE 2"=1'0
CS-76-3
SHEET 3 of 3
SMITH PLANS P.O. 8 Snowmass Col. 81654